ST7LITE49M

8-bit MCU with single voltage Flash memory data EEPROM, ADC, 8/12-bit timers, and I²C interface

Features

- Memories
  - 4 Kbytes single voltage extended Flash (XFlash) Program memory with Read-Out Protection
    In-circuit programming and in-application programming (ICP and IAP)
    Endurance: 10k write/erase cycles guaranteed
    Data retention: 20 years at 55 °C
  - 384 bytes RAM
  - 128 bytes data EEPROM with Read-Out Protection.
    300K write/erase cycles guaranteed, data retention: 20 years at 55 °C.
- Clock, reset and supply management
  - 3-level low voltage supervisor (LVD) for main supply and an auxiliary voltage detector (AVD) for safe power-on/off
  - Clock sources: Internal trimmable 8 MHz RC oscillator, auto-wakeup internal low power - low frequency oscillator, crystal/ceramic resonator or external clock
  - Five power saving modes: Halt, Active-halt, Auto-wakeup from Halt, Wait and Slow
- I/O Ports
  - Up to 24 multifunctional bidirectional I/Os
  - 8 high sink outputs

LQFP32 (7x7mm) SDIP32

- 5 timers
  - Configurable watchdog timer
  - Dual 8-bit Lite timers with prescaler, 1 real-time base and 1 input capture
  - Dual 12-bit Auto-reload timers with 4 PWM outputs, input capture, output compare, dead-time generation and enhanced one-pulse mode functions
- Communication interface:
  - I²C multimaster interface
- A/D converter: 10 input channels
- Interrupt management
  - 13 interrupt vectors plus TRAP and RESET
- Instruction set
  - 8-bit data manipulation
  - 63 basic instructions with illegal opcode detection
  - 17 main addressing modes
  - 8 x 8 unsigned multiply instructions
- Development tools
  - Full HW/SW development package
  - DM (Debug Module)

Table 1. Device summary

Features	ST7LITE49M
Program memory	4 Kbytes
RAM (stack) - bytes	384 (128)
Data EEPROM - bytes	128
Operating supply	2.4 to 5.5 V
CPU frequency	Up to 8 MHz
Operating temperature	-40 to +125 °C
Packages	LQFP32, SDIP32

Contents

1 Description 13

2 Pin description 14

3 Register and memory mapping 17

4 Flash programmable memory 20

4.1 Introduction 20

4.2 Main features 20

4.3 Programming modes 20

4.3.1 In-circuit programming (ICP) 20

4.3.2 In-application programming (IAP) 21

4.4 ICC interface 21

4.5 Memory protection 23

4.5.1 Read-out protection 23

4.5.2 Flash write/erase protection 23

4.6 Related documentation 23

4.7 Description of Flash control/status register (FCSR) 23

5 Data EEPROM 24

5.1 Introduction 24

5.2 Main features 24

5.3 Memory access 25

5.3.1 Read operation (E2LAT=0) 25

5.3.2 Write operation (E2LAT=1) 25

5.4 Power saving modes 26

5.4.1 Wait mode 26

5.4.2 Active-halt mode 26

5.4.3 Halt mode 26

5.5 Access error handling 26

5.6 Data EEPROM read-out protection 27

5.7 EEPROM control/status register (EECSR) 27

6 Central processing unit 28
6.1 Introduction 28
6.2 Main features 28
6.3 CPU registers 28
6.3.1 Accumulator (A) 29
6.3.2 Index registers (X and Y) 29
6.3.3 Program counter (PC) 29
6.3.4 Condition code register (CC) 29
6.3.5 Stack pointer (SP) 31

7 Supply, reset and clock management 33
7.1 RC oscillator adjustment 33
7.1.1 Internal RC oscillator 33
7.1.2 Auto-wakeup RC oscillator 34
7.2 Multi-oscillator (MO) 36
7.2.1 External clock source 36
7.2.2 Crystal/ceramic oscillators 36
7.2.3 Internal RC oscillator 36
7.3 Reset sequence manager (RSM) 37
7.3.1 Introduction 37
7.3.2 Asynchronous external RESET pin 39
7.3.3 External power-on reset 39
7.3.4 Internal low voltage detector (LVD) reset 39
7.3.5 Internal watchdog reset 40
7.4 System integrity management (SI) 41
7.4.1 Low voltage detector (LVD) 41
7.4.2 Auxiliary voltage detector (AVD) 42
7.4.3 Low power modes 43
7.5 Register description 44
7.5.1 Main clock control/status register (MCCSR) 44
7.5.2 RC control register (RCCR) 44
7.5.3 System integrity (SI) control/status register (SICSR) 45
7.5.4 AVD threshold selection register (AVDTHCR) 46
7.5.5 Clock controller control/status register (CKCNTCSR) 47

8 Interrupts 48

8.1 Introduction 48
8.2 Masking and processing flow 48
8.2.1 Servicing pending interrupts 50
8.2.2 Interrupt vector sources 50
8.3 Interrupts and low power modes 51
8.4 Concurrent and nested management 52
8.5 Description of interrupt registers 53
8.5.1 CPU CC register interrupt bits 53
8.5.2 Interrupt software priority registers (ISPRx) 53
8.5.3 External interrupt control register (EICR) 56

9 Power saving modes 57
9.1 Introduction 57
9.2 Slow mode 58
9.3 Wait mode 58
9.4 Active-halt and Halt modes 59
9.4.1 Active-halt mode 60
9.4.2 Halt mode 61
9.5 Auto-wakeup from Halt mode 63
9.5.1 Register description 66
9.5.2 AWUFH control/status register (AWUCSR) 66
9.5.3 AWUFH prescaler register (AWUPR) 67

10 I/O ports 68
10.1 Introduction 68
10.2 Functional description 68
10.2.1 Input modes 68
10.2.2 Output modes 69
10.2.3 Alternate functions 70
10.2.4 Analog alternate function 72
10.3 I/O port implementation 72
10.4 Unused I/O pins 72
10.5 Low power modes 72
10.6 Interrupts 73
10.7 Device-specific I/O port configuration 73

10.7.1 Standard ports 73
10.7.2 Other ports 73

11 On-chip peripherals 75

11.1 Watchdog timer (WDG) 75
11.1.1 Introduction 75
11.1.2 Main features 75
11.1.3 Functional description 75
11.1.4 Hardware watchdog option 76
11.1.5 Interrupts 76
11.1.6 Register description 77
11.2 Dual 12-bit autoreload timer 78
11.2.1 Introduction 78
11.2.2 Main features 78
11.2.3 Functional description 80
11.2.4 Low power modes 92
11.2.5 Interrupts 92
11.2.6 Register description 92
11.3 Lite timer 2 (LT2) 102
11.3.1 Introduction 102
11.3.2 Main features 102
11.3.3 Functional description 103
11.3.4 Low power modes 104
11.3.5 Interrupts 104
11.3.6 Register description 104
11.4 I^2C bus interface (I^2C) 108
11.4.1 Introduction 108
11.4.2 Main features 108
11.4.3 General description 108
11.4.4 Functional description 111
Slave mode 111
Master mode 113
11.4.5 Low power modes 116
11.4.6 Interrupts 116
11.4.7 Register description 117
11.5 10-bit A/D converter (ADC) 125
11.5.1 Introduction 125

11.5.2 Main features . . . 125
11.5.3 Functional description . . . 125
11.5.4 Low power modes . . . 127
11.5.5 Interrupts . . . 127
11.5.6 Register description . . . 128

12 Instruction set . . . 130
12.1 ST7 addressing modes . . . 130
12.1.1 Inherent mode . . . 131
12.1.2 Immediate mode . . . 132
12.1.3 Direct modes . . . 132
12.1.4 Indexed modes (no offset, short, long) . . . 132
12.1.5 Indirect modes (short, long) . . . 133
12.1.6 Indirect indexed modes (short, long) . . . 133
12.1.7 Relative modes (direct, indirect) . . . 134
12.2 Instruction groups . . . 135
12.2.1 Illegal opcode reset . . . 136

13 Electrical characteristics . . . 139
13.1 Parameter conditions . . . 139
13.1.1 Minimum and maximum values . . . 139
13.1.2 Typical values . . . 139
13.1.3 Typical curves . . . 139
13.1.4 Loading capacitor . . . 139
13.1.5 Pin input voltage . . . 139
13.2 Absolute maximum ratings . . . 140
13.3 Operating conditions . . . 142
13.3.1 General operating conditions . . . 142
13.3.2 Operating conditions with low voltage detector (LVD) . . . 142
13.3.3 Auxiliary voltage detector (AVD) thresholds . . . 143
13.3.4 Voltage drop between AVD flag setting and LVD reset generation . . . 143
13.3.5 Internal RC oscillator . . . 144
13.4 Supply current characteristics . . . 147
13.4.1 Supply current . . . 147
13.4.2 On-chip peripherals . . . 150
13.5 Communication interface characteristics . . . 150

13.5.1 I²C interface 150
13.6 Clock and timing characteristics 151
13.6.1 Auto-wakeup from Halt oscillator (AWU) 152
13.6.2 Crystal and ceramic resonator oscillators 153
13.7 Memory characteristics 155
13.8 EMC (electromagnetic compatibility) characteristics 156
13.8.1 Functional EMS (electromagnetic susceptibility) 156
13.8.2 EMI (electromagnetic interference) 157
13.8.3 Absolute maximum ratings (electrical sensitivity) 157
13.9 I/O port pin characteristics 158
13.9.1 General characteristics 158
13.9.2 Output driving current 160
13.10 Control pin characteristics 168
13.10.1 Asynchronous RESET pin 168
13.11 10-bit ADC characteristics 170

14 Device configuration and ordering information 173
14.1 Option bytes 173
14.1.1 Option byte 1 173
14.1.2 Option byte 0 174
14.2 Device ordering information 176
14.3 Development tools 176
14.3.1 Starter kits 177
14.3.2 Development and debugging tools 177
14.3.3 Programming tools 177
14.3.4 Order codes for development and programming tools 177
14.4 ST7 application notes 178

15 Package mechanical data 182
15.1 Thermal characteristics 184

16 Revision history 185

List of tables

Table 1. Device summary . . . 1
Table 2. Device pin description . . . 15
Table 3. Hardware register map . . . 18
Table 4. Interrupt software priority truth table . . . 31
Table 5. Predefined RC oscillator calibration values . . . 33
Table 6. ST7 clock sources . . . 37
Table 7. CPU clock delay during reset sequence . . . 38
Table 8. Low power modes . . . 43
Table 9. Description of interrupt events . . . 43
Table 10. Reset source selection . . . 45
Table 11. Internal RC prescaler selection bits . . . 46
Table 12. AVD threshold selection bits . . . 46
Table 13. Clock register mapping and reset values . . . 47
Table 14. Interrupt software priority levels . . . 49
Table 15. Setting the interrupt software priority . . . 53
Table 16. Interrupt vector vs. ISPRx bits . . . 54
Table 17. Dedicated interrupt instruction set . . . 54
Table 18. ST7LITE49M interrupt mapping . . . 55
Table 19. Interrupt sensitivity bits . . . 56
Table 20. Enabling/disabling Active-halt and Halt modes . . . 59
Table 21. Configuring the dividing factor . . . 67
Table 22. AWU register mapping and reset values . . . 67
Table 23. DR value and output pin status . . . 69
Table 24. I/O port mode options . . . 71
Table 25. I/O port configuration . . . 71
Table 26. Effect of low power modes on I/O ports . . . 72
Table 27. Description of interrupt events . . . 73
Table 28. PA5:0, PB7:0, PC7:4 and PC2:0 pins . . . 73
Table 29. PA7:6 pins . . . 73
Table 30. PC3 pin . . . 73
Table 31. Port configuration . . . 74
Table 32. I/O port register mapping and reset values . . . 74
Table 33. Watchdog timing . . . 76
Table 34. Watchdog timer register mapping and reset values . . . 77
Table 35. Effect of low power modes on autoreload timer . . . 92
Table 36. Description of interrupt events . . . 92
Table 37. Counter clock selection . . . 93
Table 38. Register mapping and reset values . . . 100
Table 39. Effect of low power modes on Lite timer 2 . . . 104
Table 40. Description of interrupt events . . . 104
Table 41. Lite timer register mapping and reset values . . . 106
Table 42. Effect of low power modes on the I^2C interface . . . 116
Table 43. Description of interrupt events . . . 116
Table 44. Configuration of I^2C delay times . . . 123
Table 45. I^2C register mapping and reset values . . . 124
Table 46. Effect of low power modes on the A/D converter . . . 127
Table 47. Channel selection using CH[3:0] . . . 128
Table 48. Configuring the ADC clock speed . . . 129

Table 49. ADC register mapping and reset values . . . 129
Table 50. Description of addressing modes . . . 130
Table 51. ST7 addressing mode overview . . . 130
Table 52. Instructions supporting inherent addressing mode . . . 131
Table 53. Instructions supporting inherent immediate addressing mode . . . 132
Table 54. Instructions supporting direct, indexed, indirect and indirect indexed addressing modes 133
Table 55. Instructions supporting relative modes . . . 134
Table 56. ST7 instruction set . . . 135
Table 57. Illegal opcode detection . . . 136
Table 58. Voltage characteristics . . . 140
Table 59. Current characteristics . . . 141
Table 60. Thermal characteristics . . . 141
Table 61. General operating conditions . . . 142
Table 62. Operating characteristics with LVD . . . 142
Table 63. Operating characteristics with AVD . . . 143
Table 64. Voltage drop . . . 143
Table 65. Internal RC oscillator characteristics (5.0 V calibration) . . . 144
Table 66. Internal RC oscillator characteristics (3.3 V calibration) . . . 144
Table 67. Supply current characteristics . . . 147
Table 68. On-chip peripheral characteristics . . . 150
Table 69. I^2C interface characteristics . . . 150
Table 70. SCL frequency (multimaster I^2C interface) . . . 151
Table 71. General timings . . . 151
Table 72. External clock source characteristics . . . 152
Table 73. AWU from Halt characteristics . . . 152
Table 74. Crystal/ceramic resonator oscillator characteristics . . . 153
Table 75. Typical ceramic resonators . . . 153
Table 76. RAM and hardware registers characteristics . . . 155
Table 77. Flash program memory characteristics . . . 155
Table 78. Data EEPROM memory characteristics . . . 155
Table 79. EMS test results . . . 156
Table 80. EMI emissions . . . 157
Table 81. ESD absolute maximum ratings . . . 157
Table 82. Electrical sensitivities . . . 158
Table 83. General characteristics . . . 158
Table 84. Output driving current characteristics . . . 160
Table 85. Asynchronous RESET pin characteristics . . . 168
Table 86. ADC characteristics . . . 170
Table 87. ADC accuracy with VDD = 3.3 to 5.5 V . . . 171
Table 88. ADC accuracy with VDD = 2.7 to 3.3 V . . . 171
Table 89. ADC accuracy with VDD = 2.4 to 2.7 V . . . 171
Table 90. Startup clock selection . . . 173
Table 91. LVD threshold configuration . . . 173
Table 92. Selection of the resonator oscillator range . . . 174
Table 93. Configuration of sector size . . . 175
Table 94. Development tool order codes for the ST7LITE49M family . . . 177
Table 95. ST7 application notes . . . 178
Table 96. 32-pin plastic dual in-line package, shrink 400-mil width, (mechanical data . . . 182
Table 97. 32-pin low profile quad flat package (7x7), package mechanical data . . . 183
Table 98. Thermal characteristics . . . 184
Table 99. Document revision history . . . 185

List of figures

Figure 1. ST7LITE49M general block diagram . . . 13
Figure 2. 32-pin SDIP package pinout . . . 14
Figure 3. 32-pin LQFP 7x7 package pinout . . . 14
Figure 4. ST7LITE49M memory map . . . 17
Figure 5. Typical ICC interface . . . 22
Figure 6. EEPROM block diagram . . . 24
Figure 7. Data EEPROM programming flowchart . . . 25
Figure 8. Data EEPROM write operation . . . 26
Figure 9. Data EEPROM programming cycle . . . 27
Figure 10. CPU registers . . . 28
Figure 11. Stack manipulation example . . . 32
Figure 12. Clock switching . . . 35
Figure 13. Clock management block diagram . . . 35
Figure 14. Reset sequence phases . . . 38
Figure 15. Reset block diagram . . . 39
Figure 16. Reset sequences . . . 40
Figure 17. Low voltage detector vs reset . . . 42
Figure 18. Reset and supply management block diagram . . . 42
Figure 19. Using the AVD to monitor VDD . . . 43
Figure 20. Interrupt processing flowchart . . . 49
Figure 21. Priority decision process . . . 50
Figure 22. Concurrent interrupt management . . . 52
Figure 23. Nested interrupt management . . . 52
Figure 24. Power saving mode transitions . . . 57
Figure 25. Slow mode clock transition . . . 58
Figure 26. Wait mode flowchart . . . 59
Figure 27. Active-halt timing overview . . . 60
Figure 28. Active-halt mode flowchart . . . 61
Figure 29. Halt timing overview . . . 62
Figure 30. Halt mode flowchart . . . 62
Figure 31. AWUFH mode block diagram . . . 63
Figure 32. AWUF Halt timing diagram . . . 64
Figure 33. AWUFH mode flowchart . . . 65
Figure 34. I/O port general block diagram . . . 70
Figure 35. Interrupt I/O port state transitions . . . 72
Figure 36. Watchdog block diagram . . . 75
Figure 37. Single timer mode (ENCNTR2=0) . . . 79
Figure 38. Dual timer mode (ENCNTR2=1) . . . 79
Figure 39. PWM polarity inversion . . . 81
Figure 40. PWM function . . . 81
Figure 41. PWM signal from 0% to 100% duty cycle . . . 82
Figure 42. Dead time generation . . . 83
Figure 43. ST7LITE49M block diagram of break function . . . 84
Figure 44. Block diagram of output compare mode (single timer) . . . 85
Figure 45. Block diagram of input capture mode . . . 85
Figure 46. Input capture timing diagram . . . 86
Figure 47. Long range input capture block diagram . . . 86
Figure 48. Long range input capture timing diagram . . . 88

Figure 49. Block diagram of One-pulse mode . . . 90
Figure 50. One-pulse mode and PWM timing diagram . . . 90
Figure 51. Dynamic DCR2/3 update in One-pulse mode. . . . 91
Figure 52. Force overflow timing diagram . . . 91
Figure 53. Lite timer 2 block diagram . . . 102
Figure 54. Input capture timing diagram . . . 103
Figure 55. I^2C bus protocol . . . 109
Figure 56. I^2C interface block diagram . . . 110
Figure 57. Transfer sequencing . . . 115
Figure 58. Event flags and interrupt generation . . . 116
Figure 59. ADC block diagram . . . 126
Figure 60. Pin loading conditions . . . 139
Figure 61. Pin input voltage . . . 140
Figure 62. fCPU maximum operating frequency versus VDD supply voltage . . . 142
Figure 63. Frequency vs voltage at four different ambient temperatures (RC at 5 V) . . . 145
Figure 64. Frequency vs voltage at four different ambient temperatures (RC at 3.3 V). . . . 145
Figure 65. Accuracy in % vs voltage at 4 different ambient temperatures (RC at 5 V) . . . 146
Figure 66. Accuracy in % vs voltage at 4 different ambient temperatures (RC at 3.3 V). . . . 146
Figure 67. Typical IDD in Run mode vs. fCPU . . . 148
Figure 68. Typical IDD in WFI vs. fCPU. . . . 148
Figure 69. Typical IDD in slow mode vs. fCPU . . . 148
Figure 70. Typical IDD in Slow-wait mode vs. fCPU . . . 149
Figure 71. Typical IDD vs. temperature at VDD = 5 V and fCPU = 8 MHz . . . 149
Figure 72. Typical application with an external clock source . . . 152
Figure 73. Typical application with a crystal or ceramic resonator. . . . 154
Figure 74. Two typical applications with unused I/O pin . . . 159
Figure 75. R_{pu} resistance versus voltage at four different temperatures . . . 159
Figure 76. I_{pu} current versus voltage at four different temperatures . . . 159
Figure 77. Typical VOL at VDD = 2.4 V (standard) . . . 161
Figure 78. Typical VOL at VDD = 3 V (standard). . . . 161
Figure 79. Typical VOL at VDD = 5 V (standard). . . . 161
Figure 80. Typical VOL at VDD = 2.4 V (high sink) . . . 162
Figure 81. Typical VOL at VDD = 3 V (high sink). . . . 162
Figure 82. Typical VOL at VDD = 5 V (high sink). . . . 162
Figure 83. Typical VOL vs. VDD at I_{IO} = 2 mA (standard) . . . 163
Figure 84. Typical VOL vs. VDD at I_{IO} = 4 mA (standard) . . . 163
Figure 85. Typical VOL vs VDD at I_{IO} = 2 mA (high sink) . . . 163
Figure 86. Typical VOL vs VDD at $_{IO}$ = 8 mA (high sink). . . . 164
Figure 87. Typical VOL vs VDD at I_{IO} = 12 mA (high sink) . . . 164
Figure 88. Typical VDD-VOH vs. IIO at VDD = 2.4 V (high sink). . . . 164
Figure 89. Typical VDD-VOH vs. IIO at VDD = 3 V (high sink) . . . 165
Figure 90. Typical VDD-VOH vs. IIO at VDD = 5 V (high sink) . . . 165
Figure 91. Typical VDD-VOH vs. IIO at VDD = 2.4 V (standard). . . . 166
Figure 92. Typical VDD-VOH vs. IIO at VDD = 3 V (standard) . . . 166
Figure 93. Typical VDD-VOH vs. IIO at VDD = 5 V (standard) . . . 166
Figure 94. Typical VDD-VOH vs. V_{DD} at IIO = 2 mA (high sink) . . . 167
Figure 95. Typical VDD-VOH vs. VDD at IIO = 4 mA (high sink). . . . 167
Figure 96. RESET pin protection when LVD is enabled . . . 169
Figure 97. RESET pin protection when LVD is disabled . . . 170
Figure 98. Typical application with ADC . . . 171
Figure 99. ADC accuracy characteristics. . . . 172

Figure 100. Ordering information scheme 176
Figure 101. 32-pin plastic dual in-line package, shrink 400-mil width, package outline. 182
Figure 102. 32-pin low profile quad flat package (7x7), package outline. 183

1 Description

The ST7LITE49M is a member of the ST7 microcontroller family. All ST7 devices are based on a common industry-standard 8-bit core, featuring an enhanced instruction set.

The ST7LITE49M features Flash memory with byte-by-byte in-circuit programming (ICP) and in-application programming (IAP) capability.

Under software control, the ST7LITE49M device can be placed in Wait, Slow, or Halt mode, reducing power consumption when the application is in idle or standby state.

The enhanced instruction set and addressing modes of the ST7 offer both power and flexibility to software developers, enabling the design of highly efficient and compact application code. In addition to standard 8-bit data management, all ST7 microcontrollers feature true bit manipulation, 8x8 unsigned multiplication and indirect addressing modes.

The ST7LITE49M features an on-chip Debug Module (DM) to support in-circuit debugging (ICD). For a description of the DM registers, refer to the ST7 ICC protocol reference manual.

Figure 1. ST7LITE49M general block diagram

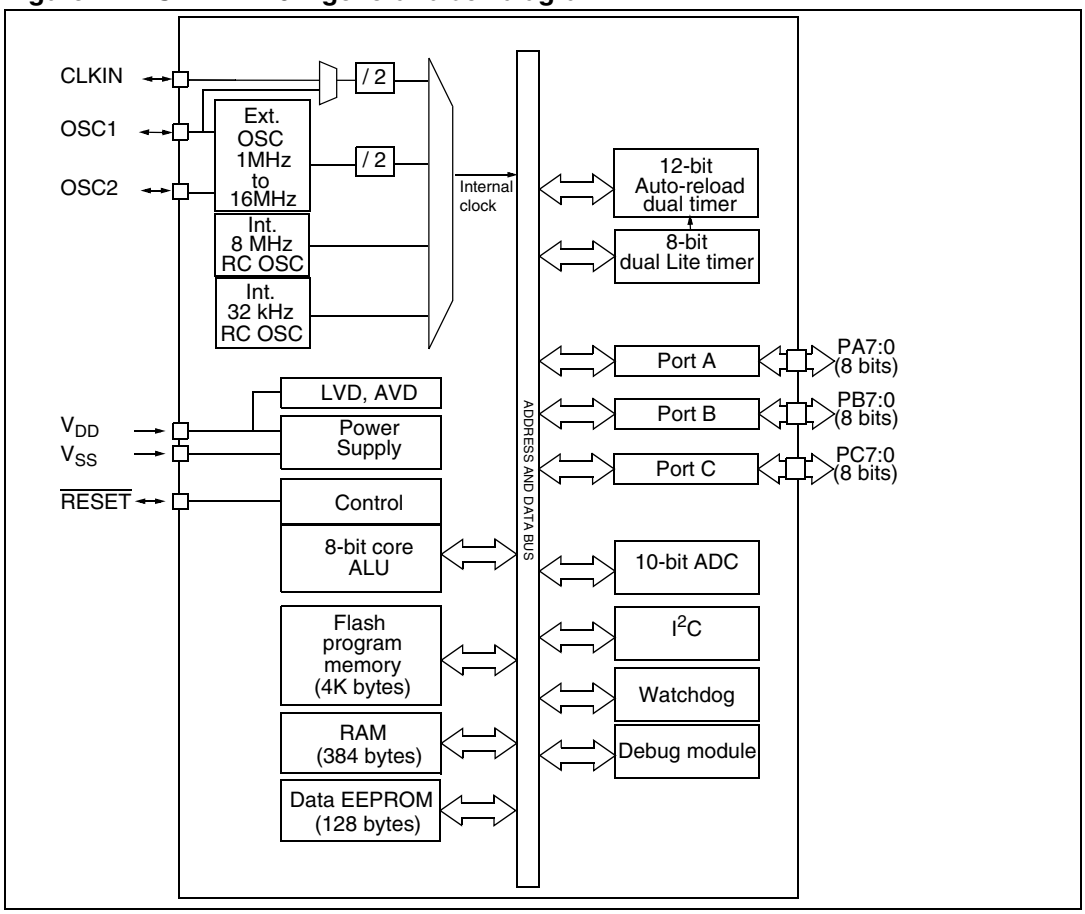

2 Pin description

Figure 2. 32-pin SDIP package pinout

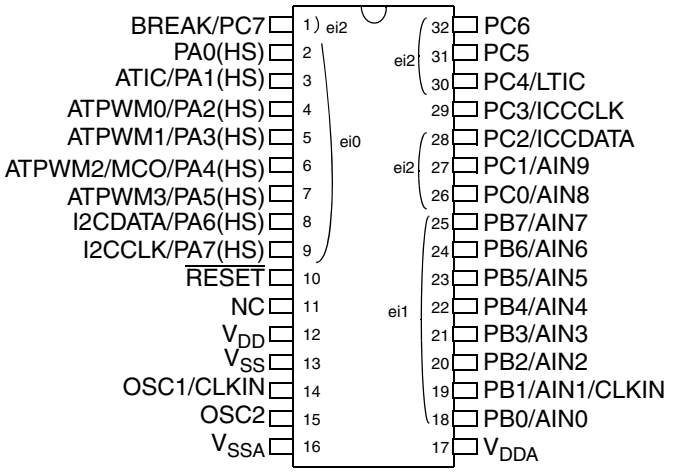

Note 1: Available on 8 Kbytes version only

Figure 3. 32-pin LQFP 7x7 package pinout

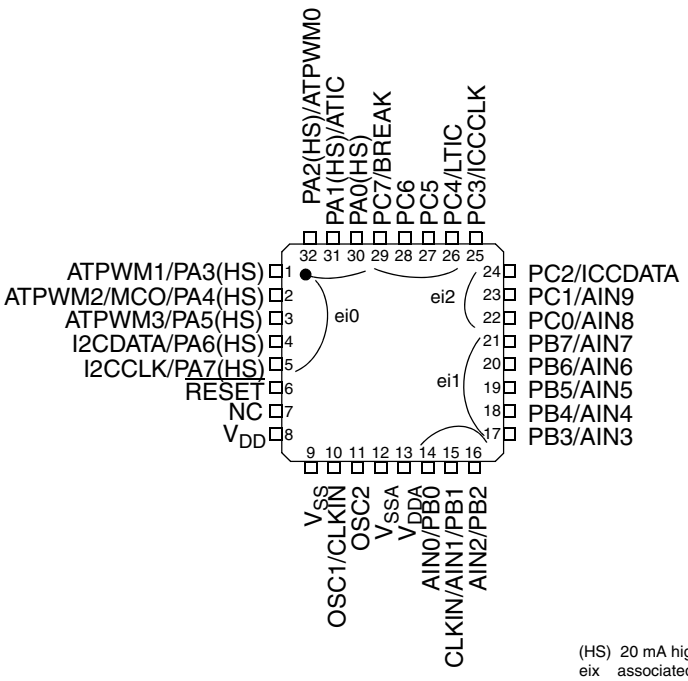

Legend / Abbreviations for *Table 2*:

Type: I = input, O = output, S = supply

In/Output level: C_T = CMOS $0.3V_{DD}/0.7V_{DD}$ with input trigger

Output level: HS = 20 mA high sink (on N-buffer only)

Port and control configuration:

- Input: float = floating, wpu = weak pull-up, int = interrupt, ana = analog
- Output: OD = open-drain, PP = push-pull

The RESET configuration of each pin is shown in bold which is valid as long as the device is in reset state.

Table 2. Device pin description

Pin number		Pin name	Type	Level		Port/control						Main function (after reset)	Alternate function
						Input				Output			
LQFP32	SDIP32			Input	Output	float	wpu	int	ana	OD[1]	PP		
1	5	PA3(HS)/ATPWM1	I/O	C_T	HS	**x**	ei0			x	x	**Port A3 (HS)**	ATPWM1
2	6	PA4(HS)/ ATPWM2/MCO	I/O	C_T	HS	**x**				x	x	**Port A4 (HS)**	ATPWM2/ MCO
3	7	PA5 (HS)ATPWM3	I/O	C_T	HS	**x**				x	x	**Port A5 (HS)**	ATPWM3
4	8	PA6(HS)/ I2CDATA	I/O	C_T	HS	**x**		ei0		T		**Port A6 (HS)**	I2CDATA
5	9	PA7(HS)/I2CCLK	I/O	C_T	HS	**x**				T		**Port A7 (HS)**	I2CCLK
6	10	RESET					**x**			x		Reset	
8	12	V_{DD}[2]	S									Digital supply voltage	
9	13	V_{SS}[2]	S									Digital ground voltage	
10	14	OSC1/CLKIN	I									Resonator oscillator inverter input or external clock input	
11	15	OSC2	O									Resonator oscillator output	
12	16	V_{SSA}[2]	S									Analog ground voltage	
13	17	V_{DDA}[2]	S									Analog supply voltage	

Table 2. Device pin description

Pin number		Pin name	Type	Level		Port/control						Main function (after reset)	Alternate function
						Input				Output			
LQFP32	SDIP32			Input	Output	float	wpu	int	ana	OD[1]	PP		
14	18	PB0/AIN0	I/O	C_T		**x**			x	x	x	**Port B0**	AIN0
15	19	PB1/AIN1/CLKIN	I/O	C_T		**x**			x	x	x	**Port B1**	AIN1/ External clock source
16	20	PB2/AIN2	I/O	C_T		**x**			x	x	x	**Port B2**	AIN2
17	21	PB3/AIN3	I/O	C_T		**x**	ei1		x	x	x	**Port B3**	AIN3
18	22	PB4/AIN4	I/O	C_T		**x**			x	x	x	**Port B4**	AIN4
19	23	PB5/AIN5	I/O	C_T		**x**			x	x	x	**Port B5**	AIN5
20	24	PB6/AIN6	I/O	C_T		**x**			x	x	x	**Port B6**	AIN6
21	25	PB7/AIN7	I/O	C_T		**x**			x	x	x	**Port B7**	AIN7
22	26	PC0/AIN8	I/O	C_T		**x**			x	x	x	**Port C0**	AIN8
23	27	PC1/AIN9	I/O	C_T		**x**	ei2		x	x	x	**Port C1**	AIN9
24	28	PC2/ICCDATA	I/O	C_T		**x**				x	x	**Port C2**	ICCDATA
25	29	PC3/ICCCLK	I/O	C_T		x	**x**			x	x	**Port C3**	ICCCLK
26	30	PC4/LTIC	I/O	C_T		**x**				x	x	**Port C4**	LTIC
27	31	PC5	I/O	C_T		**x**				x	x	**Port C5**	
28	32	PC6	I/O	C_T		**x**	ei2			x	x	**Port C6**	
29	1	PC7/BREAK	I/O	C_T		**x**				x	x	**Port C7**	BREAK
30	2	PA0 (HS)	I/O	C_T	HS	**x**				x	x	**Port A0** (HS)	
31	3	PA1 (HS)/ATIC	I/O	C_T	HS	**x**	ei0			x	x	**Port A1 (HS)**	ATIC
32	4	PA2 (HS)/ATPWM0	I/O	C_T	HS	**x**				x	x	**Port A2 (HS)**	ATPWM0

1. In the open-drain output column, T defines a true open-drain I/O (P-Buffer and protection diode to V_{DD} are not implemented).
2. It is mandatory to connect all available V_{DD} and V_{DDA} pins to the supply voltage and all V_{SS} and V_{SSA} pins to ground.

3 Register and memory mapping

As shown in *Figure 4*, the MCU is capable of addressing 64 Kbytes of memories and I/O registers.

The available memory locations consist of 128 bytes of register locations, 384 bytes of RAM, 128 bytes of data EEPROM and 4 Kbytes of Flash program memory. The RAM space includes up to 128 bytes for the stack from 180h to 1FFh.

The highest address bytes contain the user reset and interrupt vectors.

The Flash memory contains two sectors (see *Figure 4*) mapped in the upper part of the ST7 addressing space so the reset and interrupt vectors are located in Sector 0 (FFE0h-FFFFh).

The size of Flash Sector 0 and other device options are configurable by option bytes (refer to *Section 14.1 on page 173*).

Caution: Memory locations marked as “Reserved” must never be accessed. Accessing a reserved area can have unpredictable effects on the device.

Figure 4. ST7LITE49M memory map

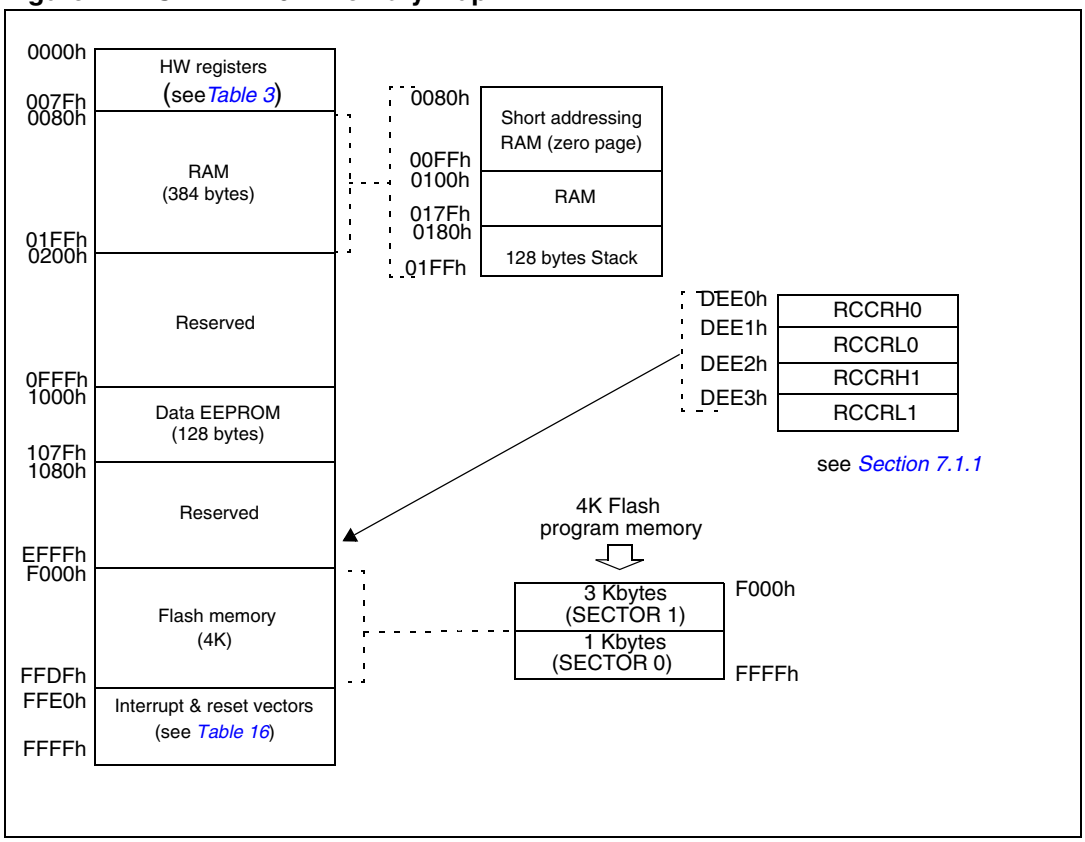

Table 3. Hardware register map(1)

Address	Block	Register label	Register name	Reset status	Remarks
0000h	Port A	PADR	Port A data register	00h	R/W
0001h		PADDR	Port A Data direction register	00h	R/W
0002h		PAOR	Port A option register	00h	R/W
0003h	Port B	PBDR	Port B data register	00h	R/W
0004h		PBDDR	Port B data direction register	00h	R/W
0005h		PBOR	Port B option register	00h	R/W
0006h	Port C	PCDR	Port C data register	00h	R/W
0007h		PCDDR	Port C data direction register	00h	R/W
0008h		PCOR	Port C option register	08h	R/W
0009h to 000Bh	Reserved area (3 bytes)				
000Ch	LITE TIMER	LTCSR2	Lite timer control/status register 2	0Fh	R/W
000Dh		LTARR	Lite timer auto-reload register	00h	R/W
000Eh		LTCNTR	Lite timer counter register	00h	Read Only
000Fh		LTCSR1	Lite timer control/status register 1	0x00 0000b	R/W
0010h		LTICR	Lite timer input capture register	xxh	Read Only
0011h	AUTO-RELOAD TIMER	ATCSR	Timer control/status register	0x00 0000b	R/W
0012h		CNTR1H	Counter register 1 High	00h	Read Only
0013h		CNTR1L	Counter register 1 Low	00h	Read Only
0014h		ATR1H	Auto-reload register 1 High	00h	R/W
0015h		ATR1L	Auto-reload register 1 Low	00h	R/W
0016h		PWMCR	PWM output control register	00h	R/W
0017h		PWM0CSR	PWM 0 control/status register	00h	R/W
0018h		PWM1CSR	PWM 1 control/status register	00h	R/W
0019h		PWM2CSR	PWM 2 control/status register	00h	R/W
001Ah		PWM3CSR	PWM 3 control/status register	00h	R/W
001Bh		DCR0H	PWM 0 duty cycle register High	00h	R/W
001Ch		DCR0L	PWM 0 duty cycle register Low	00h	R/W
001Dh		DCR1H	PWM 1 duty cycle register High	00h	R/W
001Eh		DCR1L	PWM 1 duty cycle register Low	00h	R/W
001Fh		DCR2H	PWM 2 duty cycle register High	00h	R/W
0020h		DCR2L	PWM 2 duty cycle register Low	00h	R/W
0021h		DCR3H	PWM 3 duty cycle register High	00h	R/W
0022h		DCR3L	PWM 3 duty cycle register Low	00h	R/W
0023h		ATICRH	Input capture register High	00h	Read Only
0024h		ATICRL	Input capture register Low	00h	Read Only
0025h		ATCSR2	Timer control/status register 2	03h	R/W
0026h		BREAKCR	Break control register	00h	R/W
0027h		ATR2H	Auto-reload register 2 High	00h	R/W
0028h		ATR2L	Auto-reload register 2 Low	00h	R/W
0029h		DTGR	Dead time generation register	00h	R/W
002Ah		BREAKEN	Break enable register	03h	R/W
002Bh to 002Ch	Reserved area (2 bytes)				
002Dh	ITC	ISPR0	Interrupt software priority register 0	FFh	R/W
002Eh		ISPR1	Interrupt software priority register 1	FFh	R/W
002Fh		ISPR2	Interrupt software priority register 2	FFh	R/W
0030h		ISPR3	Interrupt software priority register 3	FFh	R/W
0031h		EICR	External interrupt control register	00h	R/W

Table 3. Hardware register map[1] (continued)

Address	Block	Register label	Register name	Reset status	Remarks
0032h	Reserved area (1 byte)				
0033h	WDG	WDGCR	Watchdog control register	7Fh	R/W
0034h	FLASH	FCSR	Flash control/status register	00h	R/W
0035h	EEPROM	EECSR	Data EEPROM control/status register	00h	R/W
0036h 0037h 0038h	ADC	ADCCSR ADCDRH ADCDRL	A/D control status register A/D data register high	00h xxh 0xh	R/W Read Only R/W
0039h	Reserved area (1 byte)				
003Ah	MCC	MCCSR	Main Clock Control/Status register	00h	R/W
003Bh 003Ch	Clock and reset	RCCR SICSR	RC oscillator control register System integrity control/status register	FFh 011x 0x00b	R/W R/W
003Dh		AVDTHCR	AVD threshold selection register / RC prescaler	00h	R/W
003Eh to 0047h	Reserved area (10 bytes)				
0048h 0049h	AWU	AWUCSR AWUPR	AWU control/status register AWU Preload register	FFh 00h	R/W R/W
004Ah 004Bh 004Ch 004Dh 004Eh 004Fh 0050h	DM[2]	DMCR DMSR DMBK1H DMBK1L DMBK2H DMBK2L DMCR2	DM control register DM status register DM breakpoint register 1 High DM breakpoint register 1 Low DM breakpoint register 2 High DM breakpoint register 2 Low DM control register 2	00h 00h 00h 00h 00h 00h 00h	R/W R/W R/W R/W R/W R/W R/W
0051h	Clock Controller	CKCNTCSR	Clock controller status register	09h	R/W
0052h to 0063h	Reserved area (18 bytes)				
0064h 0065h 0066h 0067h 0068h 0069h 006Ah	I2C	I2CCR I2CSR1 I2CSR2 I2CCCR I2COAR1 I2COAR2 I2CDR	I^2C control register I^2C status register 1 I^2C status register 2 I^2C clock control register I^2C own address register 1 I^2C own address register 2 I^2C data register	00h 00h 00h 00h 00h 40h 00h	R/W Read only Read only R/W R/W R/W R/W

1. Legend: x=undefined, R/W=read/write.
2. For a description of the debug module registers, see ICC protocol reference manual.

4 Flash programmable memory

4.1 Introduction

The ST7 single voltage extended Flash (XFlash) is a non-volatile memory that can be electrically erased and programmed either on a byte-by-byte basis or up to 32 bytes in parallel.

The XFlash devices can be programmed off-board (plugged in a programming tool) or on-board using in-circuit programming or in-application programming.

The array matrix organization allows each sector to be erased and reprogrammed without affecting other sectors.

4.2 Main features

- ICP (in-circuit programming)
- IAP (in-application programming)
- ICt (in-circuit testing) for downloading and executing user application test patterns in RAM
- Sector 0 size configurable by option byte
- Read-out and write protection

4.3 Programming modes

The ST7 can be programmed in three different ways:

- Insertion in a programming tool. In this mode, Flash sectors 0 and 1, option byte row and data EEPROM (if present) can be programmed or erased.
- In-circuit programming. In this mode, Flash sectors 0 and 1, option byte row and data EEPROM (if present) can be programmed or erased without removing the device from the application board.
- In-application programming. In this mode, sector 1 and data EEPROM (if present) can be programmed or erased without removing the device from the application board and while the application is running.

4.3.1 In-circuit programming (ICP)

ICP uses a protocol called ICC (in-circuit communication) which allows an ST7 plugged on a printed circuit board (PCB) to communicate with an external programming device connected via cable. ICP is performed in three steps:

Switch the ST7 to ICC mode (in-circuit communications). This is done by driving a specific signal sequence on the ICCCLK/DATA pins while the $\overline{\text{RESET}}$ pin is pulled low. When the ST7 enters ICC mode, it fetches a specific reset vector which points to the ST7 System Memory containing the ICC protocol routine. This routine enables the ST7 to receive bytes from the ICC interface.

- Download ICP Driver code in RAM from the ICCDATA pin
- Execute ICP Driver code in RAM to program the Flash memory

Depending on the ICP Driver code downloaded in RAM, Flash memory programming can be fully customized (number of bytes to program, program locations, or selection of the serial communication interface for downloading).

4.3.2 In-application programming (IAP)

This mode uses an IAP Driver program previously programmed in Sector 0 by the user (in ICP mode).

This mode is fully controlled by user software. This allows it to be adapted to the user application, (user-defined strategy for entering programming mode, choice of communications protocol used to fetch the data to be stored etc.)
IAP mode can be used to program any memory areas except Sector 0, which is Write/Erase protected to allow recovery in case errors occur during the programming operation.

4.4 ICC interface

ICP needs a minimum of 4 and up to 6 pins to be connected to the programming tool. These pins are:

- $\overline{\text{RESET}}$: device reset
- V_{SS}: device power supply ground
- ICCCLK: ICC output serial clock pin
- ICCDATA: ICC input serial data pin
- OSC1: main clock input for external source
- V_{DD}: application board power supply (optional, see Note 3)

Note: 1 If the ICCCLK or ICCDATA pins are only used as outputs in the application, no signal isolation is necessary. As soon as the Programming Tool is plugged to the board, even if an ICC session is not in progress, the ICCCLK and ICCDATA pins are not available for the application. If they are used as inputs by the application, isolation such as a serial resistor has to be implemented in case another device forces the signal. Refer to the Programming Tool documentation for recommended resistor values.

2 During the ICP session, the programming tool must control the $\overline{\text{RESET}}$ pin. This can lead to conflicts between the programming tool and the application reset circuit if it drives more than 5 mA at high level (push pull output or pull-up resistor<1 kΩ). A schottky diode can be used to isolate the application RESET circuit in this case. When using a classical RC network with R>1 kΩ or a reset management IC with open-drain output and pull-up resistor>1 kΩ, no additional components are needed. In all cases the user must ensure that no external reset is generated by the application during the ICC session.

3 The use of pin 7 of the ICC connector depends on the Programming Tool architecture. This pin must be connected when using most ST Programming Tools (it is used to monitor the application power supply). Please refer to the Programming Tool manual.

4 In "enabled option byte" mode (38-pulse ICC mode), the internal RC oscillator is forced as a clock source, regardless of the selection in the option byte. In "disabled option byte" mode (35-pulse ICC mode), pin 9 has to be connected to the PB1/CLKIN pin of the ST7 when the clock is not available in the application or if the selected clock option is not programmed in the option byte.

Caution: During normal operation the ICCCLK pin must be internally or externally pulled- up (external pull-up of 10 kΩ mandatory in noisy environment) to avoid entering ICC mode unexpectedly

during a reset. In the application, even if the pin is configured as output, any reset will put it back in input pull-up.

Figure 5. Typical ICC interface

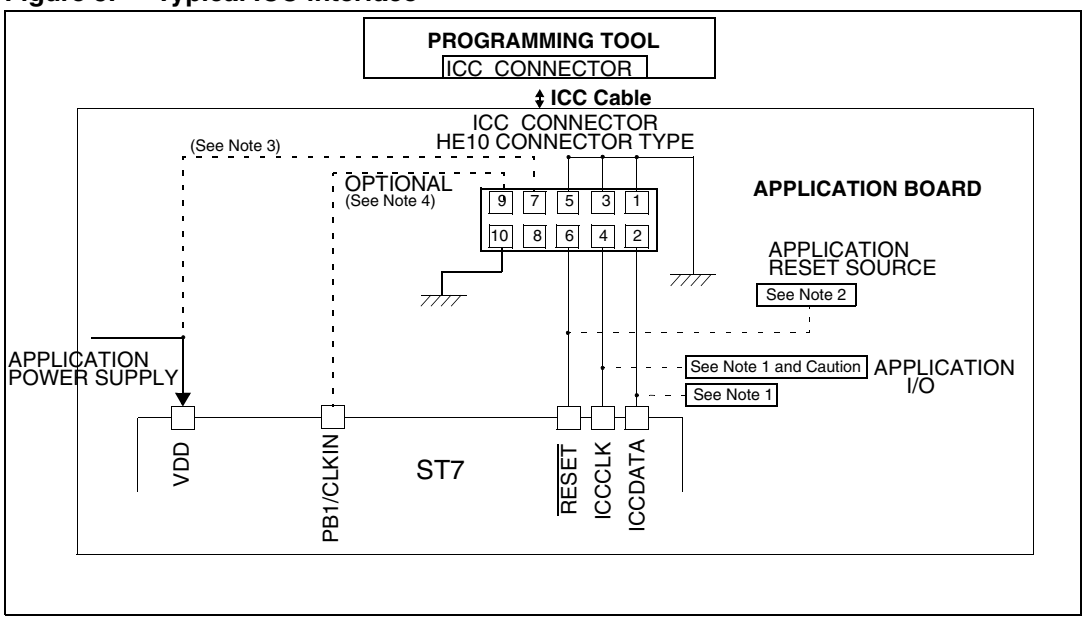

4.5 Memory protection

There are two different types of memory protection: Read-out protection and Write/Erase Protection which can be applied individually.

4.5.1 Read-out protection

Read-out protection, when selected provides a protection against program memory content extraction and against write access to Flash memory. Even if no protection can be considered as totally unbreakable, the feature provides a very high level of protection for a general purpose microcontroller. Both program and data EEPROM memory are protected.

In Flash devices, this protection is removed by reprogramming the option. In this case, both program and data EEPROM memory are automatically erased and the device can be reprogrammed.

Read-Out Protection selection depends on the device type:

- In Flash devices it is enabled and removed through the FMP_R bit in the option byte.
- In ROM devices it is enabled by mask option specified in the option list.

4.5.2 Flash write/erase protection

Write/erase protection, when set, makes it impossible to both overwrite and erase program memory. It does not apply to EEPROM data. Its purpose is to provide advanced security to applications and prevent any change being made to the memory content. Write/erase protection is enabled through the FMP_W bit in the option byte.

Caution: Once set, write/erase protection can never be removed. A write-protected Flash device is no longer reprogrammable.

4.6 Related documentation

For details on Flash programming and ICC protocol, refer to the ST7 Flash programming reference manual and to the ST7 ICC protocol reference manual.

4.7 Description of Flash control/status register (FCSR)

This register controls the XFlash erasing and programming using ICP, IAP or other programming methods.

1st RASS Key: 0101 0110 (56h)

2nd RASS Key: 1010 1110 (AEh)

When an EPB or another programming tool is used (in socket or ICP mode), the RASS keys are sent automatically.

Reset value: 000 0000 (00h)

7							0
0	0	0	0	0	OPT	LAT	PGM
Read/write							

5 Data EEPROM

5.1 Introduction

The electrically erasable programmable read only memory can be used as a non volatile back-up for storing data. Using the EEPROM requires a basic access protocol described in this chapter.

5.2 Main features

- Up to 32 bytes programmed in the same cycle
- EEPROM mono-voltage (charge pump)
- Chained erase and programming cycles
- Internal control of the global programming cycle duration
- Wait mode management
- Read-out protection

Figure 6. EEPROM block diagram

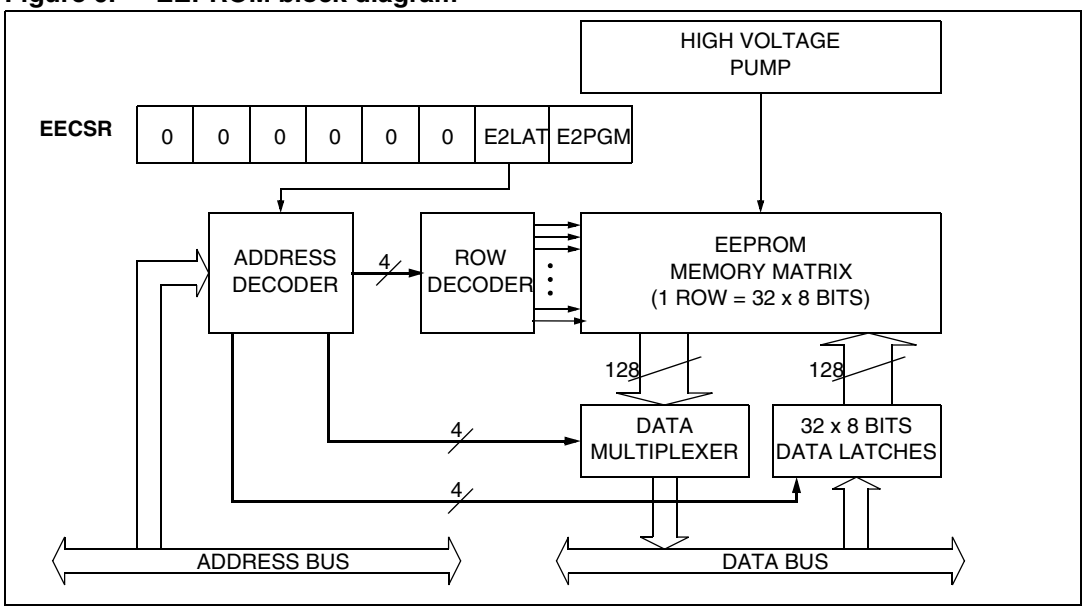

5.3 Memory access

The data EEPROM memory read/write access modes are controlled by the E2LAT bit of the EEPROM Control/Status register (EECSR). The flowchart in *Figure 7* describes these different memory access modes.

5.3.1 Read operation (E2LAT=0)

The EEPROM can be read as a normal ROM location when the E2LAT bit of the EECSR register is cleared.

On this device, data EEPROM can also be used to execute machine code. Take care not to write to the data EEPROM while executing from it. This would result in an unexpected code being executed.

5.3.2 Write operation (E2LAT=1)

To access the write mode, the E2LAT bit has to be set by software (the E2PGM bit remains cleared). When a write access to the EEPROM area occurs, the value is latched inside the 32 data latches according to its address.

When PGM bit is set by the software, all the previous bytes written in the data latches (up to 32) are programmed in the EEPROM cells. The effective high address (row) is determined by the last EEPROM write sequence. To avoid wrong programming, the user must take care that all the bytes written between two programming sequences have the same high address: only the five Least Significant Bits of the address can change.

At the end of the programming cycle, the PGM and LAT bits are cleared simultaneously.

Note: Care should be taken during the programming cycle. Writing to the same memory location will over-program the memory (logical AND between the two write access data result) because the data latches are only cleared at the end of the programming cycle and by the falling edge of the E2LAT bit. It is not possible to read the latched data (see Figure 9).

Figure 7. Data EEPROM programming flowchart

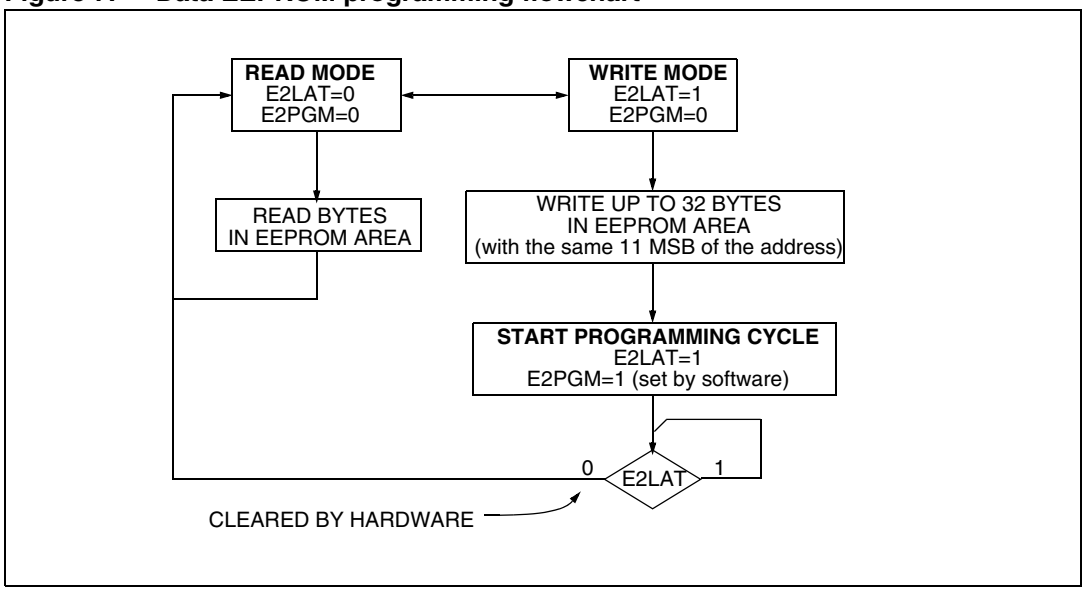

Figure 8. Data EEPROM write operation

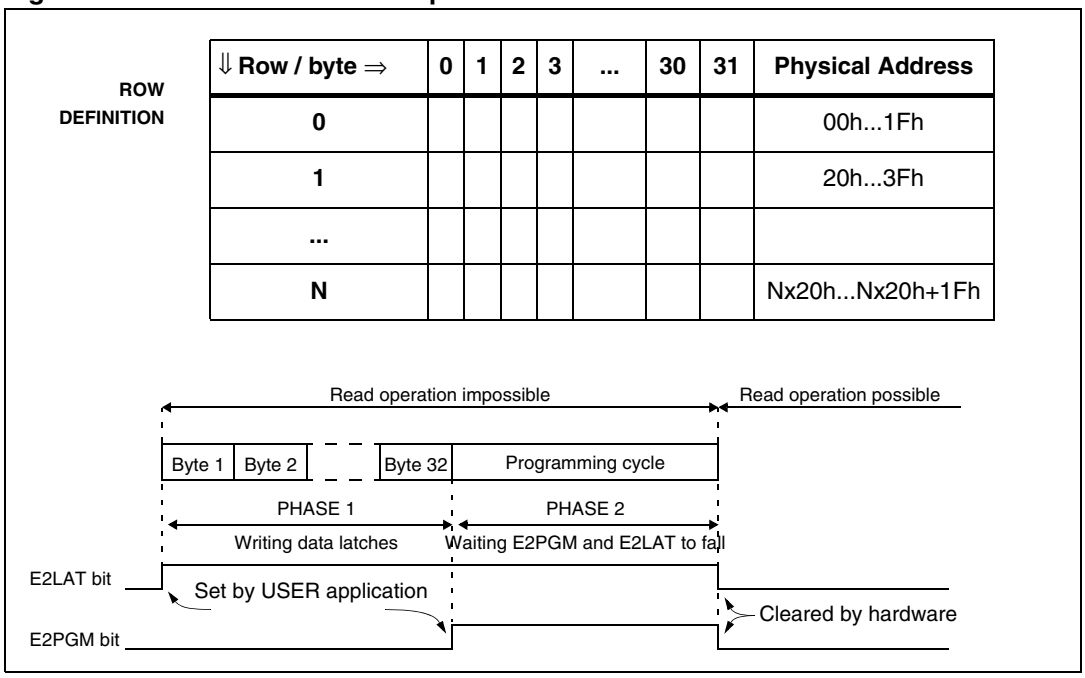

1. If a programming cycle is interrupted (by a reset action), the integrity of the data in memory is not guaranteed.

5.4 Power saving modes

5.4.1 Wait mode

The data EEPROM can enter Wait mode on execution of the WFI instruction of the microcontroller or when the microcontroller enters Active-halt mode.The data EEPROM will immediately enter this mode if there is no programming in progress, otherwise the data EEPROM will finish the cycle and then enter Wait mode.

5.4.2 Active-halt mode

Refer to Wait mode.

5.4.3 Halt mode

The data EEPROM immediately enters Halt mode if the microcontroller executes the Halt instruction. Therefore the EEPROM will stop the function in progress, and data may be corrupted.

5.5 Access error handling

If a read access occurs while E2LAT=1, then the data bus will not be driven.

If a write access occurs while E2LAT=0, then the data on the bus will not be latched.

If a programming cycle is interrupted (by a RESET action), the integrity of the data in memory will not be guaranteed.

5.6 Data EEPROM read-out protection

The read-out protection is enabled through an option bit (see *Section 14.1: Option bytes*). When this option is selected, the programs and data stored in the EEPROM memory are protected against Read-out (including a re-write protection). In Flash devices, when this protection is removed by reprogramming the option byte, the entire Program memory and EEPROM is first automatically erased.

Note: Both program memory and data EEPROM are protected using the same option bit.

Figure 9. Data EEPROM programming cycle

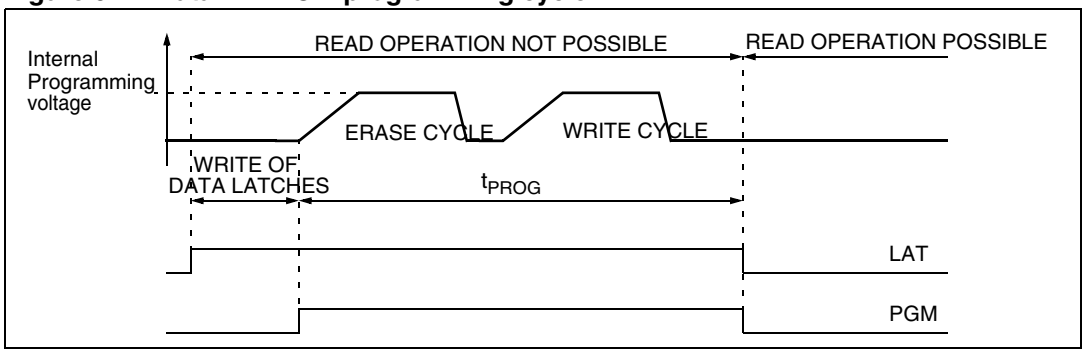

5.7 EEPROM control/status register (EECSR)

Address: 0035h

Reset value: 0000 0000 (00h)

7							0
0	0	0	0	0	0	E2LAT	E2PGM
Read/write							

Bits 7:2 = Reserved, forced by hardware to 0

0: Read mode

1: Write mode

Bit 1 = **E2LAT** *Latch access transfer bit:* this bit is set by software.

It is cleared by hardware at the end of the programming cycle. It can only be cleared by software if the E2PGM bit is cleared

Bit 0 = **E2PGM** *Programming control and status bit*

This bit is set by software to begin the programming cycle. At the end of the programming cycle, this bit is cleared by hardware.

0: Programming finished or not yet started

1: Programming cycle is in progress

Note: If the E2PGM bit is cleared during the programming cycle, the memory data is not guaranteed.

6 Central processing unit

6.1 Introduction

This CPU has a full 8-bit architecture and contains six internal registers allowing efficient 8-bit data manipulation.

6.2 Main features

- 63 basic instructions
- Fast 8-bit by 8-bit multiply
- 17 main addressing modes
- Two 8-bit index registers
- 16-bit stack pointer
- Low power modes
- Maskable hardware interrupts
- Non-maskable software interrupt

6.3 CPU registers

The six CPU registers shown in *Figure 10*. They are not present in the memory mapping and are accessed by specific instructions.

Figure 10. CPU registers

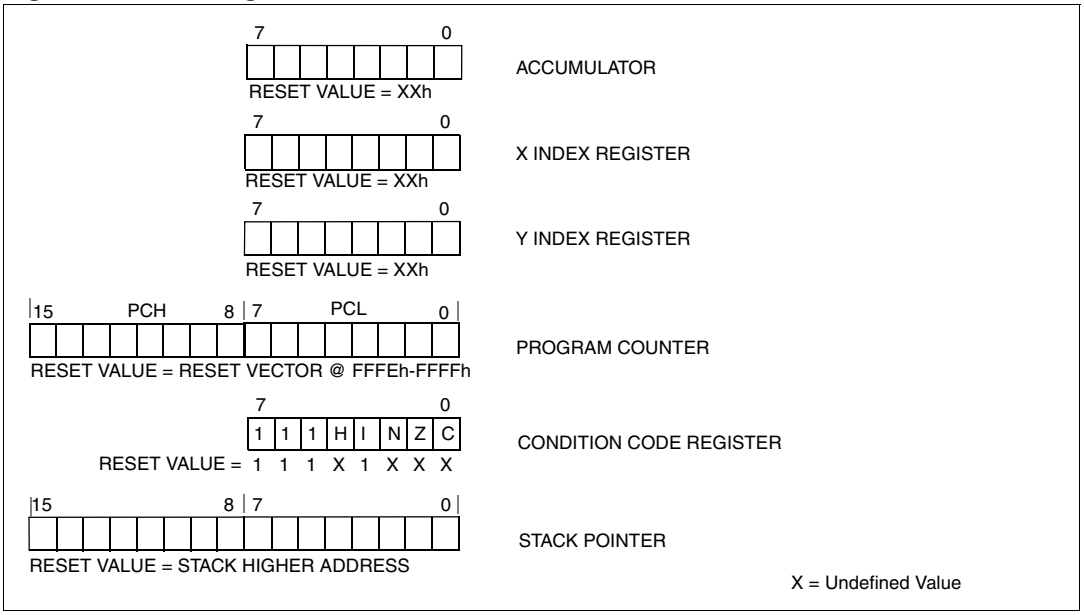

6.3.1 Accumulator (A)

The Accumulator is an 8-bit general purpose register used to hold operands and the results of the arithmetic and logic calculations and to manipulate data.

6.3.2 Index registers (X and Y)

In indexed addressing modes, these 8-bit registers are used to create either effective addresses or temporary storage areas for data manipulation. (The Cross-Assembler generates a precede instruction (PRE) to indicate that the following instruction refers to the Y register.)

The Y register is not affected by the interrupt automatic procedures (not pushed to and popped from the stack).

6.3.3 Program counter (PC)

The program counter is a 16-bit register containing the address of the next instruction to be executed by the CPU. It is made of two 8-bit registers PCL (program counter low which is the LSB) and PCH (program counter high which is the MSB).

6.3.4 Condition code register (CC)

The 8-bit condition code register contains the interrupt mask and four flags representative of the result of the instruction just executed. This register can also be handled by the PUSH and POP instructions.

Reset value: 111x 1xxx

7							0
1	1	I1	H	I0	N	Z	C
Read/write							

These bits can be individually tested and/or controlled by specific instructions.

Arithmetic management bits

Bit 4 = **H** *Half carry bit*

This bit is set by hardware when a carry occurs between bits 3 and 4 of the ALU during an ADD or ADC instruction. It is reset by hardware during the same instructions.

0: No half carry has occurred.

1: A half carry has occurred.

This bit is tested using the JRH or JRNH instruction. The H bit is useful in BCD arithmetic subroutines.

Bit 3 = **I** *Interrupt mask bit*

This bit is set by hardware when entering in interrupt or by software to disable all interrupts except the TRAP software interrupt. This bit is cleared by software.

0: Interrupts are enabled.

1: Interrupts are disabled.

This bit is controlled by the RIM, SIM and IRET instructions and is tested by the JRM and JRNM instructions.

Note: Interrupts requested while I is set are latched and can be processed when I is cleared. By default an interrupt routine is not interruptible because the I bit is set by hardware at the start of the routine and reset by the IRET instruction at the end of the routine. If the I bit is cleared by software in the interrupt routine, pending interrupts are serviced regardless of the priority level of the current interrupt routine.

Bit 2 = **N** *Negative bit*

This bit is set and cleared by hardware. It is representative of the result sign of the last arithmetic, logical or data manipulation. It is a copy of the 7th bit of the result.

0: The result of the last operation is positive or null.

1: The result of the last operation is negative (that is, the most significant bit is a logic 1).

This bit is accessed by the JRMI and JRPL instructions.

Bit 1 **= Z** *Zero bit*

This bit is set and cleared by hardware. This bit indicates that the result of the last arithmetic, logical or data manipulation is zero.

0: The result of the last operation is different from zero.

1: The result of the last operation is zero.

This bit is accessed by the JREQ and JRNE test instructions.

Bit 0 = **C** *Carry/borrow bit*

This bit is set and cleared by hardware and software. It indicates an overflow or an underflow has occurred during the last arithmetic operation.

0: No overflow or underflow has occurred.

1: An overflow or underflow has occurred.

This bit is driven by the SCF and RCF instructions and tested by the JRC and JRNC instructions. It is also affected by the “bit test and branch”, shift and rotate instructions.

Interrupt management bits

Bits 5,3 = **I1, I0** *Interrupt bits*

The combination of the I1 and I0 bits gives the current interrupt software priority.

These two bits are set/cleared by hardware when entering in interrupt. The loaded value is given by the corresponding bits in the interrupt software priority registers (IxSPR). They can be also set/cleared by software with the RIM, SIM, IRET, HALT, WFI and PUSH/POP instructions. See *Section 10.6: Interrupts* for more details.

Table 4. Interrupt software priority truth table

Interrupt software priority	I1	I0
Level 0 (main)	1	0
Level 1	0	1
Level 2	0	0
Level 3 (= interrupt disable)	1	1

6.3.5 Stack pointer (SP)

Reset value: 01FFh

15							8	7							0
0	0	0	0	0	0	0	1	1	SP6	SP5	SP4	SP3	SP2	SP1	SP0
Read/write															

The stack pointer is a 16-bit register which is always pointing to the next free location in the stack. It is then decremented after data has been pushed onto the stack and incremented before data is popped from the stack (see *Figure 11*).

Since the stack is 128 bytes deep, the 9 most significant bits are forced by hardware. Following an MCU reset, or after a reset stack pointer instruction (RSP), the stack pointer contains its reset value (the SP6 to SP0 bits are set) which is the stack higher address.

The least significant byte of the stack pointer (called S) can be directly accessed by a LD instruction.

Note: When the lower limit is exceeded, the stack pointer wraps around to the stack upper limit, without indicating the stack overflow. The previously stored information is then overwritten and therefore lost. The stack also wraps in case of an underflow.

The stack is used to save the return address during a subroutine call and the CPU context during an interrupt. The user may also directly manipulate the stack by means of the PUSH and POP instructions. In the case of an interrupt, the PCL is stored at the first location pointed to by the SP. Then the other registers are stored in the next locations as shown in *Figure 11*.

- When an interrupt is received, the SP is decremented and the context is pushed on the stack.
- On return from interrupt, the SP is incremented and the context is popped from the stack.

A subroutine call occupies two locations and an interrupt five locations in the stack area.

Figure 11. Stack manipulation example

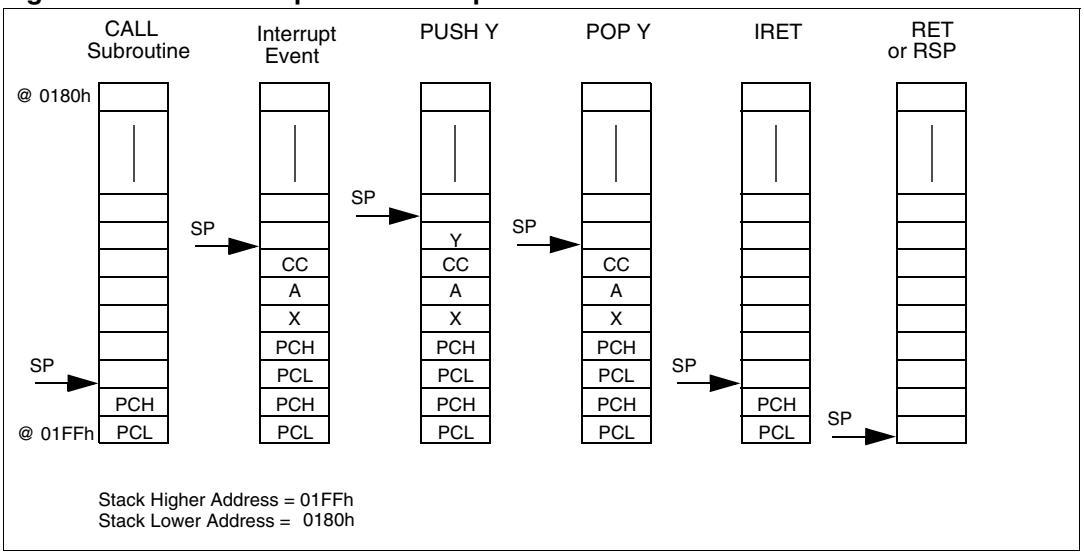

7 Supply, reset and clock management

The device includes a range of utility features for securing the application in critical situations (for example in case of a power brown-out), and reducing the number of external components. The main features are the following:

- Clock management
  - 8 MHz internal RC oscillator (enabled by option byte)
  - Auto-wakeup RC oscillator (enabled by option byte)
  - 1 to 16 MHz or 32 kHz External crystal/ceramic resonator (selected by option byte)
  - External clock input (enabled by option byte)
- Reset sequence manager (RSM)
- System integrity management (SI)
  - Main supply low voltage detection (LVD) with reset generation (enabled by option byte)
  - Auxiliary voltage detector (AVD) with interrupt capability for monitoring the main supply (enabled by option byte)

7.1 RC oscillator adjustment

7.1.1 Internal RC oscillator

The device contains an internal RC oscillator with a specific accuracy for a given device, temperature and voltage range (4.5 V - 5.5 V). It must be calibrated to obtain the frequency required in the application. This is done by software writing a 10-bit calibration value in the RCCR (RC control register) and in the bits 6:5 in the SICSR (SI control status register).

Whenever the microcontroller is reset, the RCCR returns to its default value (FFh), i.e. each time the device is reset, the calibration value must be loaded in the RCCR. Predefined calibration values are stored in EEPROM for 3 and 5 V V_{DD} supply voltages at 25 °C (see *Table 5*).

Table 5. Predefined RC oscillator calibration values

RCCR	Conditions	ST7LITE49M Address
RCCRH0	V_{DD}= 5V T_A= 25°C f_{RC} = 8 MHz	DEE0h(1) (CR[9:2])
RCCRL0		DEE1h(1) (CR[1:0])
RCCRH1	V_{DD} = 3.3 V T_A= 25°C f_{RC} = 8 MHz	DEE2h(1) (CR[9:2])
RCCRL1		DEE3h(1) (CR[1:0])

1. The DEE0h, DEE1h, DEE2h and DEE3h addresses are located in a reserved area in non-volatile memory. They are read-only bytes for the application code. This area cannot be erased or programmed by any ICC operations.
For compatibility reasons with the SICSR register, CR[1:0] bits are stored in the 5th and 6th position of DEE1 and DEE3 addresses.

In 38-pulse ICC mode, the internal RC oscillator is forced as a clock source, regardless of the selection in the option byte.

Section 13: Electrical characteristics on page 139 for more information on the frequency and accuracy of the RC oscillator.

To improve clock stability and frequency accuracy, it is recommended to place a decoupling capacitor, typically 100 nF, between the V_{DD} and V_{SS} pins and also between the V_{DDA} and V_{SSA} pins as close as possible to the ST7 device.

These bytes are systematically programmed by ST, including on FASTROM devices.

Caution: If the voltage or temperature conditions change in the application, the frequency may need to be recalibrated. Refer to application note AN1324 for information on how to calibrate the RC frequency using an external reference signal.

7.1.2 Auto-wakeup RC oscillator

The ST7LITE49M also contains an Auto-wakeup RC oscillator. This RC oscillator should be enabled to enter auto-wakeup from halt mode.

The auto-wakeup (AWU) RC oscillator can also be configured as the startup clock through the CKSEL[1:0] option bits (see *Section 14.1: Option bytes on page 173*).

This is recommended for applications where very low power consumption is required.

Switching from one startup clock to another can be done in run mode as follows (see *Figure 12*):

Case 1 Switching from internal RC to AWU

1. Set the RC/AWU bit in the CKCNTCSR register to enable the AWU RC oscillator
2. The RC_FLAG is cleared and the clock output is at 1.
3. Wait 3 AWU RC cycles till the AWU_FLAG is set
4. The switch to the AWU clock is made at the positive edge of the AWU clock signal
5. Once the switch is made, the internal RC is stopped

Case 2 Switching from AWU RC to internal RC

1. Reset the RC/AWU bit to enable the internal RC oscillator
2. Using a 4-bit counter, wait until 8 internal RC cycles have elapsed. The counter is running on internal RC clock.
3. Wait till the AWU_FLAG is cleared (1AWU RC cycle) and the RC_FLAG is set (2 RC cycles)
4. The switch to the internal RC clock is made at the positive edge of the internal RC clock signal
5. Once the switch is made, the AWU RC is stopped

Note: 1 When the internal RC is not selected, it is stopped so as to save power consumption.

2 When the internal RC is selected, the AWU RC is turned on by hardware when entering Auto-wakeup from Halt mode.

3 When the external clock is selected, the AWU RC oscillator is always on.

Figure 12. Clock switching

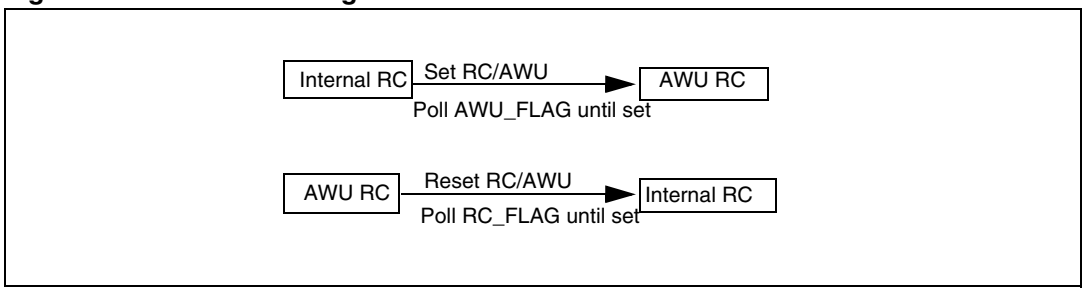

Figure 13. Clock management block diagram

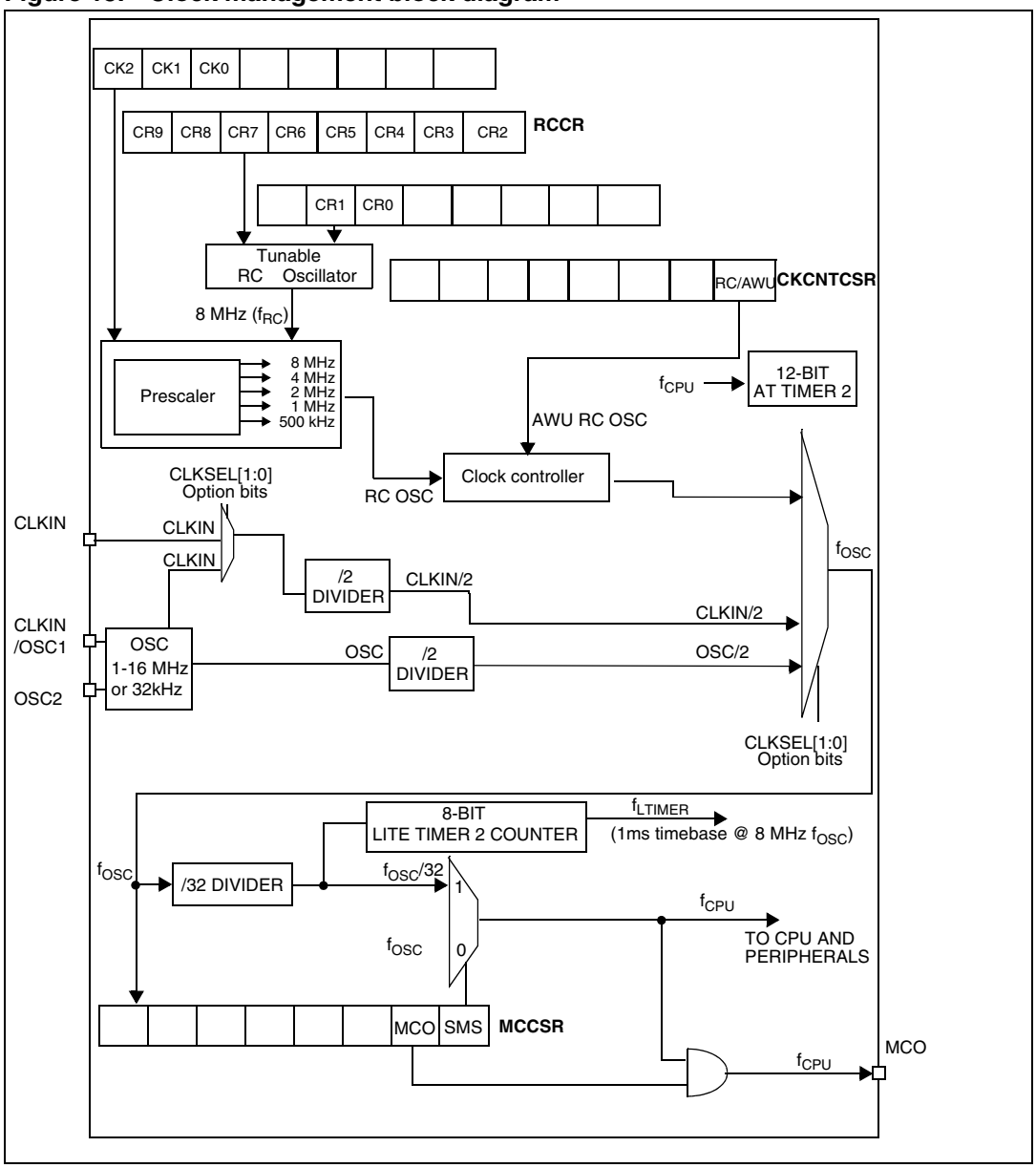

7.2 Multi-oscillator (MO)

The main clock of the ST7 can be generated by four different source types coming from the multi-oscillator block (1 to 16 MHz):

- An external source
- 5 different configurations for crystal or ceramic resonator oscillators
- An internal high frequency RC oscillator

Each oscillator is optimized for a given frequency range in terms of consumption and is selectable through the option byte. The associated hardware configurations are shown in *Table 6*. Refer to the electrical characteristics section for more details.

7.2.1 External clock source

In this external clock mode, a clock signal (square, sinus or triangle) with ~50% duty cycle has to drive the OSC1 pin while the OSC2 pin is tied to ground.

Note: When the Multi-Oscillator is not used OSCI1 and OSCI2 must be tied to ground, and PB1 is selected by default as the external clock.

7.2.2 Crystal/ceramic oscillators

In this mode, with a self-controlled gain feature, oscillator of any frequency from 1 to 16 MHz can be placed on OSC1 and OSC2 pins. This family of oscillators has the advantage of producing a very accurate rate on the main clock of the ST7. In this mode of the multi-oscillator, the resonator and the load capacitors have to be placed as close as possible to the oscillator pins in order to minimize output distortion and start-up stabilization time. The loading capacitance values must be adjusted according to the selected oscillator.

These oscillators are not stopped during the RESET phase to avoid losing time in the oscillator start-up phase.

7.2.3 Internal RC oscillator

In this mode, the tunable 1% RC oscillator is used as main clock source. The two oscillator pins have to be tied to ground.

The calibration is done through the RCCR[7:0] and SICSR[6:5] registers.

Table 6. ST7 clock sources

	Hardware configuration
External Clock	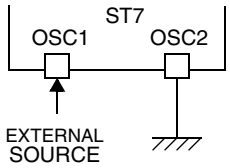
Crystal/Ceramic Resonators	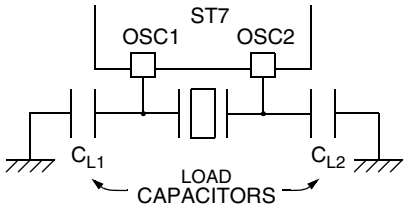
Internal RC Oscillator	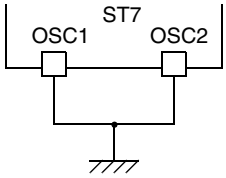

7.3 Reset sequence manager (RSM)

7.3.1 Introduction

The reset sequence manager includes three RESET sources as shown in *Figure 15*:

- External $\overline{\text{RESET}}$ source pulse
- Internal LVD RESET (low voltage detection)
- Internal WATCHDOG RESET

Note: A reset can also be triggered following the detection of an illegal opcode or prebyte code. Refer to Section 12.2.1 on page 136 for further details.

These sources act on the $\overline{\text{RESET}}$ pin and it is always kept low during the delay phase.

The RESET service routine vector is fixed at addresses FFFEh-FFFFh in the ST7 memory mapping.

The basic RESET sequence consists of 3 phases as shown in *Figure 14*:

- Active phase depending on the RESET source
- 256 CPU clock cycle delay (see *Table 7*)

Caution: When the ST7 is unprogrammed or fully erased, the Flash is blank and the reset vector is not programmed. For this reason, it is recommended to keep the $\overline{\text{RESET}}$ pin in low state until programming mode is entered, in order to avoid unwanted behavior.

The 256 CPU clock cycle delay allows the oscillator to stabilize and ensures that recovery has taken place from the reset state. The shorter or longer clock cycle delay is automatically selected depending on the clock source chosen by option byte.

The reset vector fetch phase duration is 2 clock cycles.

Table 7. CPU clock delay during reset sequence

Clock source	CPU clock cycle delay
Internal RC 8 MHz oscillator	4096
Internal RC 32 kHz oscillator	256
External clock (connected to CLKIN/PB1 pin)	4096
External crystal/ceramic oscillator (connected to OSC1/OSC2 pins)	4096
External crystal/ceramic 1-16 MHz oscillator	4096
External crystal/ceramic 32 kHz oscillator	256

Figure 14. Reset sequence phases

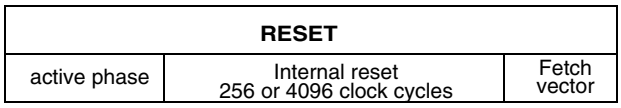

7.3.2 Asynchronous external $\overline{RESET}$ pin

The $\overline{RESET}$ pin is both an input and an open-drain output with integrated R_{ON} weak pull-up resistor. This pull-up has no fixed value but varies in accordance with the input voltage. It can be pulled low by external circuitry to reset the device. See Electrical Characteristics section for more details.

A RESET signal originating from an external source must have a duration of at least $t_{h(RSTL)in}$ in order to be recognized (see *Figure 16: Reset sequences*). This detection is asynchronous and therefore the MCU can enter reset state even in Halt mode.

The $\overline{RESET}$ pin is an asynchronous signal which plays a major role in EMS performance. In a noisy environment, it is recommended to follow the guidelines mentioned in the electrical characteristics section.

Figure 15. Reset block diagram

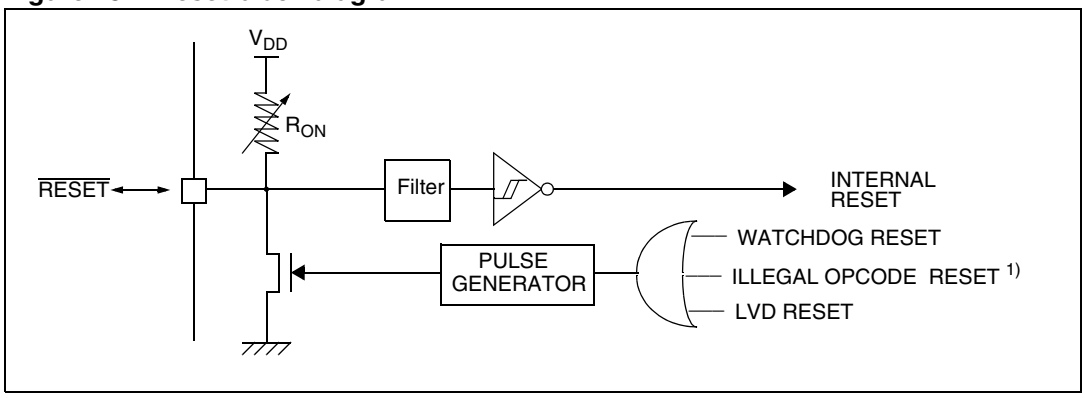

1. See *Section 12.2.1: Illegal opcode reset on page 136* for more details on illegal opcode reset conditions.

7.3.3 External power-on reset

If the LVD is disabled by option byte, to start up the microcontroller correctly, the user must ensure by means of an external reset circuit that the reset signal is held low until V_{DD} is over the minimum level specified for the selected f_{OSC} frequency.

A proper reset signal for a slow rising V_{DD} supply can generally be provided by an external RC network connected to the $\overline{RESET}$ pin.

7.3.4 Internal low voltage detector (LVD) reset

Two different reset sequences caused by the internal LVD circuitry can be distinguished:

- Power-on reset
- Voltage drop reset

The device $\overline{RESET}$ pin acts as an output that is pulled low when V_{DD} is lower than V_{IT+} (rising edge) or V_{DD} lower than V_{IT-} (falling edge) as shown in *Figure 16.*

The LVD filters spikes on V_{DD} larger than $t_{g(VDD)}$ to avoid parasitic resets.

7.3.5 Internal watchdog reset

The reset sequence generated by an internal watchdog counter overflow is shown in *Figure 16: Reset sequences*

Starting from the watchdog counter underflow, the device $\overline{RESET}$ pin acts as an output that is pulled low during at least $t_{w(RSTL)out}$.

Figure 16. Reset sequences

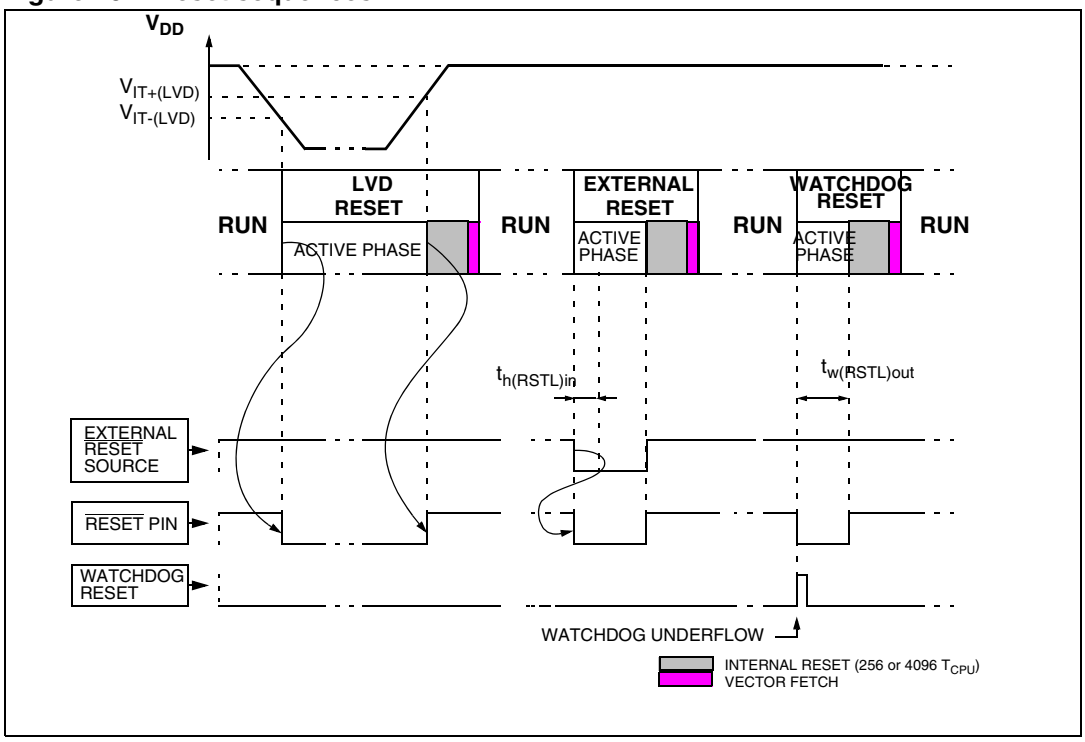

7.4 System integrity management (SI)

The system integrity management block contains the low voltage detector (LVD) and auxiliary voltage detector (AVD) functions. It is managed by the SICSR register.

Note: A reset can also be triggered following the detection of an illegal opcode or prebyte code. Refer to Section 12.2.1 on page 136 for further details.

7.4.1 Low voltage detector (LVD)

The low voltage detector function (LVD) generates a static reset when the V_{DD} supply voltage is below a $V_{IT-(LVD)}$ reference value. This means that it secures the power-up as well as the power-down keeping the ST7 in reset.

The $V_{IT-(LVD)}$ reference value for a voltage drop is lower than the $V_{IT+(LVD)}$ reference value for power-on in order to avoid a parasitic reset when the MCU starts running and sinks current on the supply (hysteresis).

The LVD reset circuitry generates a reset when V_{DD} is below:

- $V_{IT+(LVD)}$ when V_{DD} is rising
- $V_{IT-(LVD)}$ when V_{DD} is falling

The LVD function is illustrated in *Figure 17*.

The voltage threshold can be configured by option byte to be low, medium or high. See *Section 14.1 on page 173*.

Provided the minimum V_{DD} value (guaranteed for the oscillator frequency) is above $V_{IT-(LVD)}$, the MCU can only be in two modes:

- Under full software control
- In static safe reset

In these conditions, secure operation is always ensured for the application without the need for external reset hardware.

During a low voltage detector reset, the $\overline{RESET}$ pin is held low, thus permitting the MCU to reset other devices.

Note: Use of LVD with capacitive power supply: with this type of power supply, if power cuts occur in the application, it is recommended to pull V_{DD} down to 0 V to ensure optimum restart conditions. Refer to circuit example in Figure 96 on page 169 and note 4.

The LVD is an optional function which can be selected by option byte. See Section 14.1 on page 173.

It allows the device to be used without any external RESET circuitry.

If the LVD is disabled, an external circuitry must be used to ensure a proper power-on reset.

It is recommended to make sure that the V_{DD} supply voltage rises monotonously when the device is exiting from reset, to ensure the application functions properly.

Make sure that the right combination of LVD and AVD thresholds is used as LVD and AVD levels are not correlated. Refer to section Section 13.3.2 on page 142 and Section 13.3.3 on page 143 for more details.

Caution: If an LVD reset occurs after a watchdog reset has occurred, the LVD will take priority and will clear the watchdog flag.

Figure 17. Low voltage detector vs reset

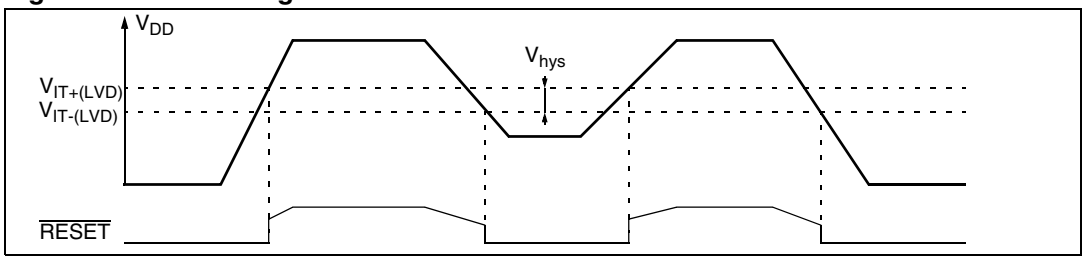

Figure 18. Reset and supply management block diagram

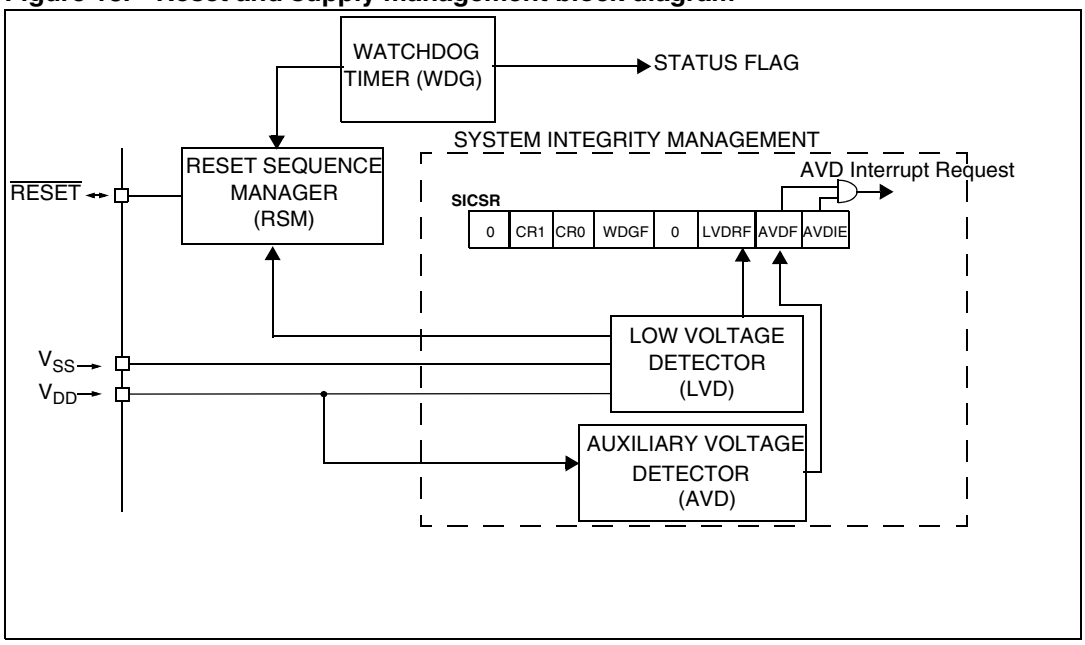

7.4.2 Auxiliary voltage detector (AVD)

The voltage detector function (AVD) is based on an analog comparison between a $V_{IT-(AVD)}$ and $V_{IT+(AVD)}$ reference value and the V_{DD} main supply voltage (V_{AVD}). The $V_{IT-(AVD)}$ reference value for falling voltage is lower than the $V_{IT+(AVD)}$ reference value for rising voltage in order to avoid parasitic detection (hysteresis).

The output of the AVD comparator is directly readable by the application software through a real-time status bit (AVDF) in the SICSR register. This bit is read only.

Monitoring the V_{DD} main supply

The AVD threshold is selected by the AVD[1:0] bits in the AVDTHCR register.

If the AVD interrupt is enabled, an interrupt is generated when the voltage crosses the $V_{IT+(AVD)}$ or $V_{IT-(AVD)}$ threshold (AVDF bit is set).

In the case of a drop in voltage, the AVD interrupt acts as an early warning, allowing software to shut down safely before the LVD resets the microcontroller. See *Figure 19*.

The interrupt on the rising edge is used to inform the application that the V_{DD} warning state is over.

Note: Make sure that the right combination of LVD and AVD thresholds is used as LVD and AVD levels are not correlated. Refer to Section 13.3.2 on page 142 and Section 13.3.3 on page 143 for more details.

Figure 19. Using the AVD to monitor V_{DD}

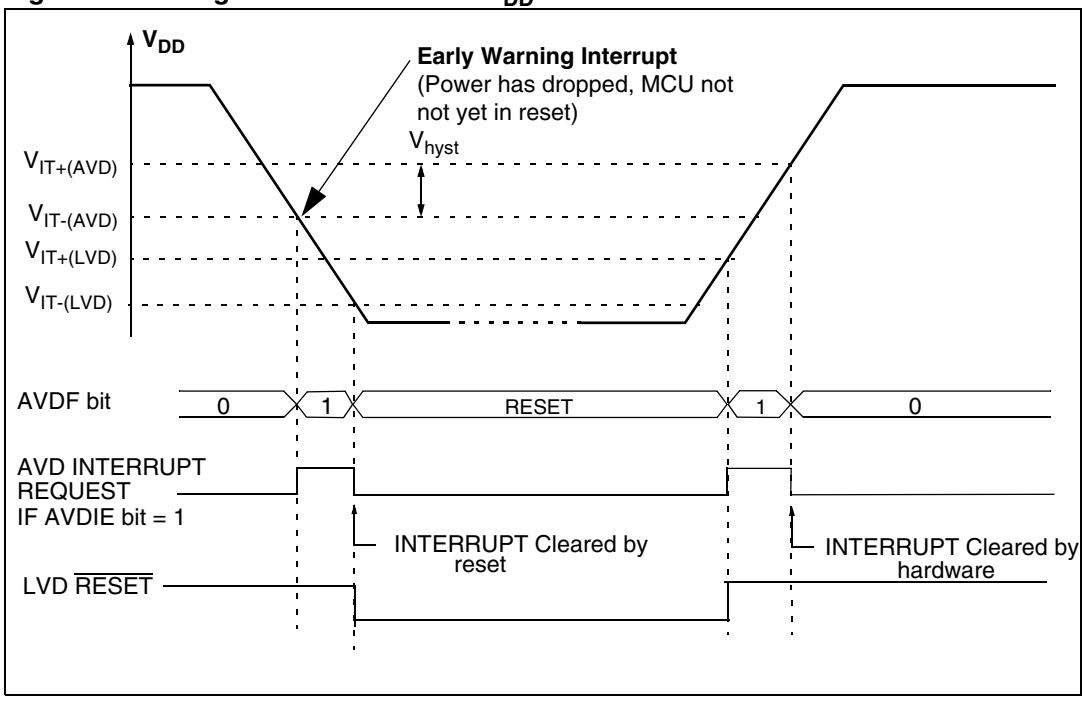

7.4.3 Low power modes

Table 8. Low power modes

Mode	Description
Wait	No effect on SI. AVD interrupts cause the device to exit from Wait mode.
Halt	The SICSR register is frozen. The AVD remains active but the AVD interrupt cannot be used to exit from Halt mode.

Interrupts

The AVD interrupt event generates an interrupt if the corresponding Enable Control Bit (AVDIE) is set and the interrupt mask in the CC register is reset (RIM instruction).

Table 9. Description of interrupt events

Interrupt event	Event flag	Enable Control bit	Exit from Wait	Exit from Halt
AVD event	AVDF	AVDIE	Yes	No

7.5 Register description

7.5.1 Main clock control/status register (MCCSR)

Reset value: 0000 0000 (00h)

7							0
0	0	0	0	0	0	MCO	SMS
Read/write							

Bits 7:2 = Reserved, must be kept cleared.

Bit 1 = **MCO** *Main clock out enable bit*

This bit is read/write by software and cleared by hardware after a reset. This bit allows to enable the MCO output clock.

0: MCO clock disabled, I/O port free for general purpose I/O.

1: MCO clock enabled.

Bit 0 = **SMS** *Slow mode selection bit*

This bit is read/write by software and cleared by hardware after a reset. This bit selects the input clock f_{OSC} or $f_{OSC}/32$.

0: Normal mode ($f_{CPU} = f_{OSC}$

1: Slow mode ($f_{CPU} = f_{OSC}/32$)

7.5.2 RC control register (RCCR)

Reset value: 1111 1111 (FFh)

7							0
CR9	CR8	CR7	CR6	CR5	CR4	CR3	CR2
Read/write							

Bits 7:0 = **CR[9:2]** *RC oscillator frequency adjustment bits*

These bits must be written immediately after reset to adjust the RC oscillator frequency and to obtain an accuracy of 1%. The application can store the correct value for each voltage range in Flash memory and write it to this register at start-up.

00h = maximum available frequency

FFh = lowest available frequency

These bits are used with the CR[1:0] bits in the SICSR register. Refer to *Chapter 7.5.3*.

Note: To tune the oscillator, write a series of different values in the register until the correct frequency is reached. The fastest method is to use a dichotomy starting with 80h.

7.5.3 System integrity (SI) control/status register (SICSR)

Reset value: 011x 0x00 (xxh)

7							0
0	CR1	CR0	WDGRF	0	LVDRF	AVDF	AVDIE
Read/write							

Bit 7 = Reserved, must be kept cleared

Bits 6:5 = **CR[1:0]** *RC oscillator frequency adjustment bits*

These bits, as well as CR[9:2] bits in the RCCR register must be written immediately after reset to adjust the RC oscillator frequency and to obtain an accuracy of 1%. Refer to *Section 7.1.1: Internal RC oscillator on page 33*.

Bit 4 = **WDGRF** *Watchdog reset flag*

This bit indicates that the last reset was generated by the watchdog peripheral. It is set by hardware (watchdog reset) and cleared by software (writing zero) or an LVD reset (to ensure a stable cleared state of the WDGRF flag when CPU starts). The WDGRF and the LVDRF flags areis used to select the reset source (see *Table 10: Reset source selection on page 45*).

Table 10. Reset source selection

RESET source	LVDRF	WDGRF
External $\overline{\text{RESET}}$ pin	0	0
Watchdog	0	1
LVD	1	X

Bit 3 = Reserved, must be kept cleared

Bit 2 = **LVDRF** *LVD reset flag*

This bit indicates that the last reset was generated by the LVD block. It is set by hardware (LVD reset) and cleared by software (by reading). When the LVD is disabled by option byte, the LVDRF bit value is undefined.

The LVDRF flag is not cleared when another RESET type occurs (external or watchdog), the LVDRF flag remains set to keep trace of the original failure.
In this case, a watchdog reset can be detected by software while an external reset can not.

Bit 1 = **AVDF** *Voltage detector flag*

This read-only bit is set and cleared by hardware. If the AVDIE bit is set, an interrupt request is generated when the AVDF bit is set. Refer to *Figure 19* and to *Section* for additional details.

0: V_{DD} over AVD threshold

1: V_{DD} under AVD threshold

Bit 0 = **AVDIE** *Voltage detector interrupt enable bit*

This bit is set and cleared by software. It enables an interrupt to be generated when the AVDF flag is set. The pending interrupt information is automatically cleared when software enters the AVD interrupt routine.

0: AVD interrupt disabled

1: AVD interrupt enabled

7.5.4 AVD threshold selection register (AVDTHCR)

Reset value: 0000 0000 (00h)

7							0
CK2	CK1	CK0	0	0	0	AVD1	AVD0
Read/write							

Bits 7:5 = **CK[2:0]** internal RC prescaler selection

These bits are set by software and cleared by hardware after a reset. These bits select the prescaler of the internal RC oscillator. See *Figure 13: Clock management block diagram on page 35* and *Table 11*.

If the internal RC is used with a supply operating range below 3.3 V, a division ratio of at least 2 must be enabled in the RC prescaler.

Table 11. Internal RC prescaler selection bits

CK2	CK1	CK0	f_{OSC}
0	0	1	$f_{RC/2}$
0	1	0	$f_{RC/4}$
0	1	1	$f_{RC/8}$
1	0	0	$f_{RC/16}$
others			f_{RC}

Bits 4:2 = Reserved, must be cleared.

Bits 1:0 = AVD[1:0] AVD threshold selection. These bits are used to select the AVD threshold. They are set and cleared by software. They are set by hardware after a reset.

Table 12. AVD threshold selection bits

AVD1	AVD0	Functionality
0	0	Low
0	1	Medium
1	0	High
1	1	AVD off

7.5.5 Clock controller control/status register (CKCNTCSR)

Reset value: 0000 1001 (09h)

7							0
0	0	0	0	AWU_FLAG	RC_FLAG	0	RC/AWU
Read/write							

Bits 7:4 = Reserved, must be kept cleared.

Bit 3 = **AWU_FLAG** *AWU selection bit*

This bit is set and cleared by hardware.

0: No switch from AWU to RC requested

1: AWU clock activated and temporization completed

Bit 2 = **RC_FLAG** *RC selection bit*

This bit is set and cleared by hardware.

0: No switch from RC to AWU requested

1: RC clock activated and temporization completed

Bit 1 = Reserved, must be kept cleared.

Bit 0 = **RC/AWU** *RC/AWU selection bit*

0: RC enabled

1: AWU enabled (default value)

Table 13. Clock register mapping and reset values

Address (Hex.)	Register label	7	6	5	4	3	2	1	0
003Ah	MCCSR Reset value	- 0	- 0	- 0	- 0	- 0	- 0	MCO 0	SMS 0
003Bh	RCCR Reset value	CR9 1	CR8 1	CR7 1	CR6 1	CR5 1	CR4 1	CR3 1	CR2 1
003Ch	SICSR Reset value	- 0	CR1 1	CR0 1	WDGRF 0	- 0	LVDRF x	AVDF x	AVDIE x
003Dh	AVDTHCR Reset value	CK2 0	CK1 0	CK0 0	- 0	- 0	- 0	AVD1 0	AVD0 0
0051h	CKCNTCSR Reset value	- 0	- 0	- 0	- 0	AWU_ FLAG 1	RC_FLA G 0	- 0	RC/AWU 1

8 Interrupts

8.1 Introduction

The ST7 enhanced interrupt management provides the following features:

- Hardware interrupts
- Software interrupt (TRAP)
- Nested or concurrent interrupt management with flexible interrupt priority and level management:
  - Up to 4 software programmable nesting levels
  - 13 interrupt vectors fixed by hardware
  - 2 non maskable events: RESET, TRAP

This interrupt management is based on:

- Bit 5 and bit 3 of the CPU CC register (I1:0),
- Interrupt software priority registers (ISPRx),
- Fixed interrupt vector addresses located at the high addresses of the memory mapping (FFE0h to FFFFh) sorted by hardware priority order.

This enhanced interrupt controller guarantees full upward compatibility with the standard (not nested) ST7 interrupt controller.

8.2 Masking and processing flow

The interrupt masking is managed by the I1 and I0 bits of the CC register and the ISPRx registers which give the interrupt software priority level of each interrupt vector (see *Table 14*). The processing flow is shown in *Figure 20*.

When an interrupt request has to be serviced:

- Normal processing is suspended at the end of the current instruction execution.
- The PC, X, A and CC registers are saved onto the stack.
- I1 and I0 bits of CC register are set according to the corresponding values in the ISPRx registers of the serviced interrupt vector.
- The PC is then loaded with the interrupt vector of the interrupt to service and the first instruction of the interrupt service routine is fetched (refer to interrupt mapping table for vector addresses).

The interrupt service routine should end with the IRET instruction which causes the contents of the saved registers to be recovered from the stack.

Note: As a consequence of the IRET instruction, the I1 and I0 bits will be restored from the stack and the program in the previous level will resume.

Table 14. Interrupt software priority levels

Interrupt software priority	Level	I1	I0
Level 0 (main)	Low ↓ High	1	0
Level 1		0	1
Level 2			0
Level 3 (= interrupt disable)		1	1

Figure 20. Interrupt processing flowchart

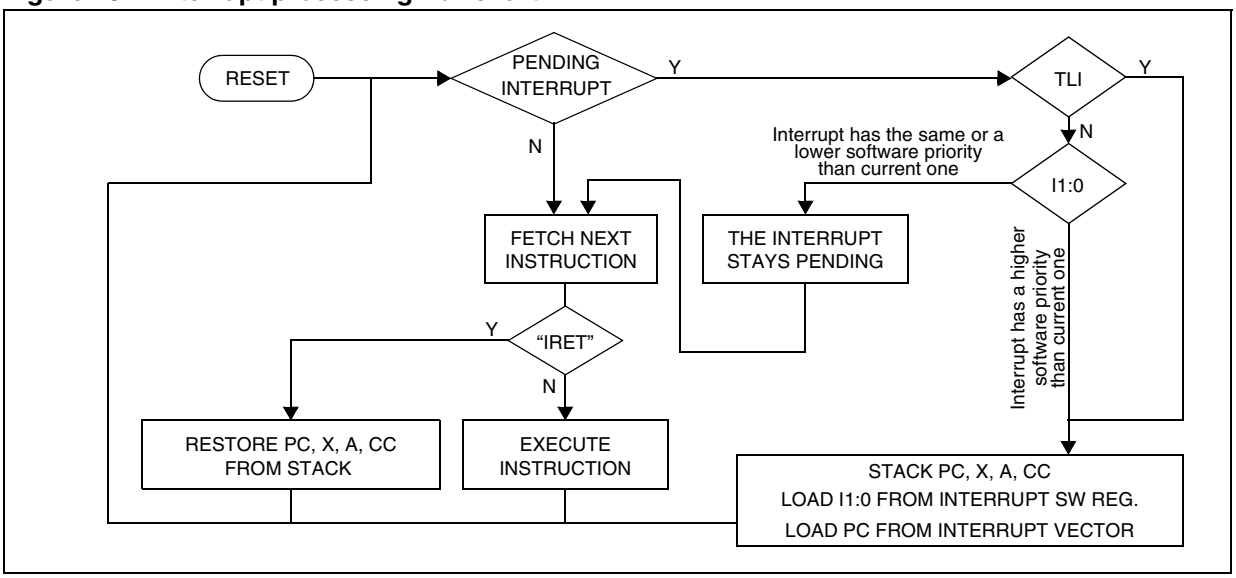

8.2.1 Servicing pending interrupts

As several interrupts can be pending at the same time, the interrupt to be taken into account is determined by the following two-step process:

- The highest software priority interrupt is serviced,
- If several interrupts have the same software priority then the interrupt with the highest hardware priority is serviced first.

Figure 21 describes this decision process.

Figure 21. Priority decision process

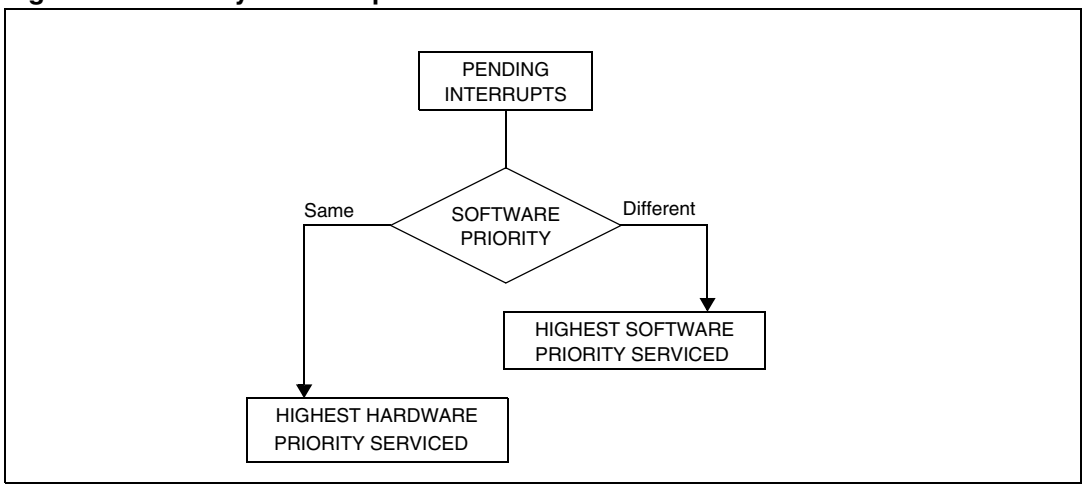

When an interrupt request is not serviced immediately, it is latched and then processed when its software priority combined with the hardware priority becomes the highest one.

Note: 1 The hardware priority is exclusive while the software one is not. This allows the previous process to succeed with only one interrupt.

2 RESET and TRAP can be considered as having the highest software priority in the decision process.

8.2.2 Interrupt vector sources

Two interrupt source types are managed by the ST7 interrupt controller: the non-maskable type (RESET, TRAP) and the maskable type (external or from internal peripherals).

Non-maskable sources

These sources are processed regardless of the state of the I1 and I0 bits of the CC register (see *Figure 20*). After stacking the PC, X, A and CC registers (except for RESET), the corresponding vector is loaded in the PC register and the I1 and I0 bits of the CC are set to disable interrupts (level 3). These sources allow the processor to exit Halt mode.

- TRAP (non maskable software interrupt)

  This software interrupt is serviced when the TRAP instruction is executed. It will be serviced according to the flowchart in *Figure 20*.
- RESET

  The RESET source has the highest priority in the ST7. This means that the first current routine has the highest software priority (level 3) and the highest hardware priority. See the RESET chapter for more details.

Maskable sources

Maskable interrupt vector sources can be serviced if the corresponding interrupt is enabled and if its own interrupt software priority (in ISPRx registers) is higher than the one currently being serviced (I1 and I0 in CC register). If any of these two conditions is false, the interrupt is latched and thus remains pending.

- External interrupts

  External interrupts allow the processor to exit from Halt low power mode.
  External interrupt sensitivity is software selectable through the external interrupt control register (EICR).
  External interrupt triggered on edge will be latched and the interrupt request automatically cleared upon entering the interrupt service routine.
  If several input pins of a group connected to the same interrupt line are selected simultaneously, these will be logically ORed.

- Peripheral interrupts

  Usually the peripheral interrupts cause the MCU to exit from Halt mode except those mentioned in *Table 18: ST7LITE49M interrupt mapping*.
  A peripheral interrupt occurs when a specific flag is set in the peripheral status registers and if the corresponding enable bit is set in the peripheral control register. The general sequence for clearing an interrupt is based on an access to the status register followed by a read or write to an associated register.

Note: The clearing sequence resets the internal latch. A pending interrupt (that is, waiting for being serviced) will therefore be lost if the clear sequence is executed.

8.3 Interrupts and low power modes

All interrupts allow the processor to exit the Wait low power mode. On the contrary, only external and other specified interrupts allow the processor to exit from the Halt modes (see column “Exit from Halt” in *Table 18: ST7LITE49M interrupt mapping*). When several pending interrupts are present while exiting Halt mode, the first one serviced can only be an interrupt with exit from Halt mode capability and it is selected through the same decision process shown in *Figure 21*.

Note: If an interrupt, that is not able to Exit from Halt mode, is pending with the highest priority when exiting Halt mode, this interrupt is serviced after the first one serviced.

8.4 Concurrent and nested management

The following *Figure 22* and *Figure 23* show two different interrupt management modes. The first is called concurrent mode and does not allow an interrupt to be interrupted, unlike the nested mode in *Figure 23*. The interrupt hardware priority is given in this order from the lowest to the highest: MAIN, IT5, IT4, IT3, IT2, IT1, IT0. The software priority is given for each interrupt.

Caution: A stack overflow may occur without notifying the software of the failure.

Figure 22. Concurrent interrupt management

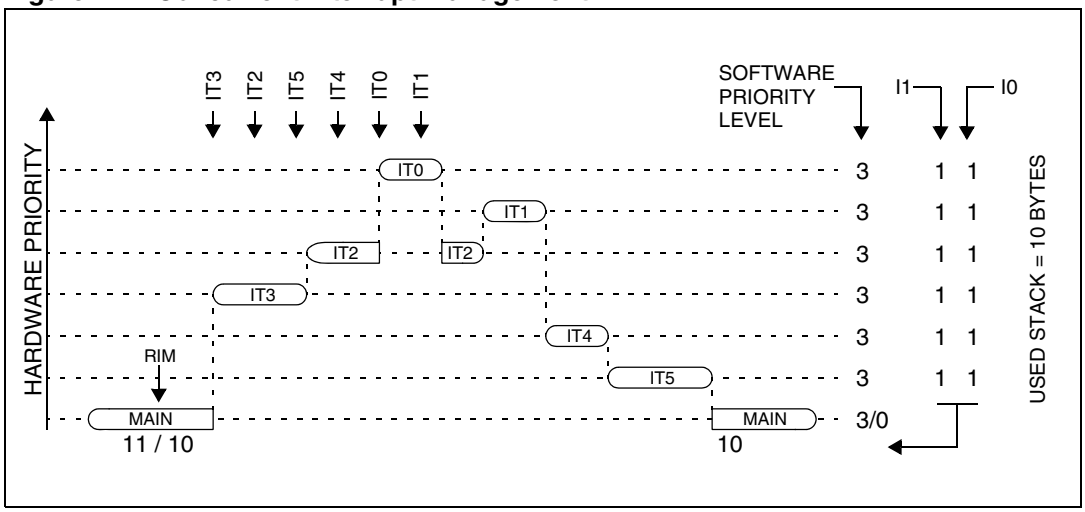

Figure 23. Nested interrupt management

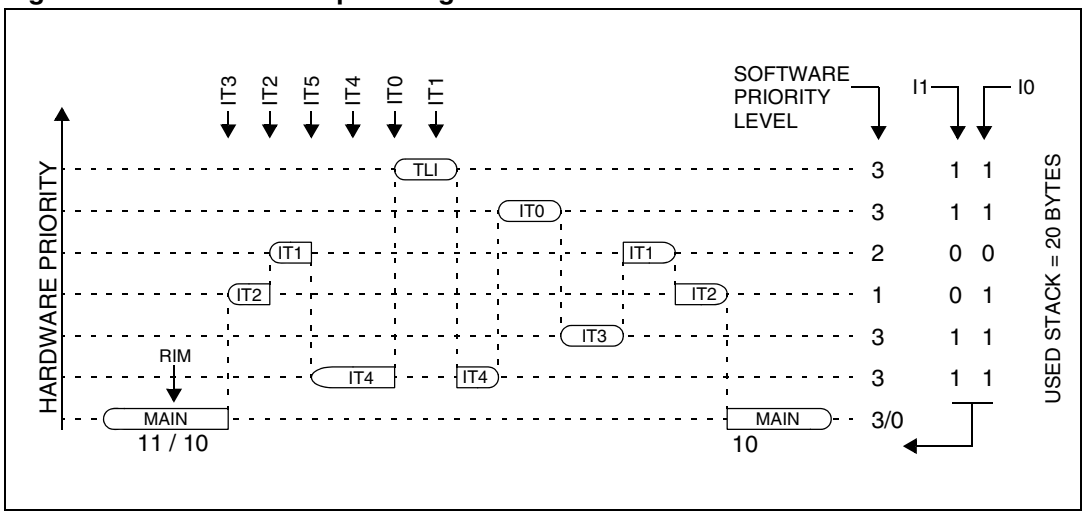

8.5 Description of interrupt registers

8.5.1 CPU CC register interrupt bits

Reset value: 111x 1010(xAh)

7							0
1	1	I1	H	I0	N	Z	C
Read/write							

Bits 5, 3 = **I1, I0** *Software interrupt priority bits*

These two bits indicate the current interrupt software priority (see *Table 15*).

These two bits are set/cleared by hardware when entering in interrupt. The loaded value is given by the corresponding bits in the interrupt software priority registers (ISPRx).

They can be also set/cleared by software with the RIM, SIM, HALT, WFI, IRET and PUSH/POP instructions (see *Table 17: Dedicated interrupt instruction set*).

TRAP and RESET events can interrupt a level 3 program.

Table 15. Setting the interrupt software priority

Interrupt software priority	Level	I1	I0
Level 0 (main)	Low ↓ High	1	0
Level 1		0	1
Level 2			0
Level 3 (= interrupt disable*)		1	1

8.5.2 Interrupt software priority registers (ISPRx)

All ISPRx register bits are read/write except bit 7:4 of **ISPR3** which are read only.

Reset value: 1111 1111 (FFh)

	7							0
ISPR0	I1_3	I0_3	I1_2	I0_2	I1_1	I0_1	I1_0	I0_0
ISPR1	I1_7	I0_7	I1_6	I0_6	I1_5	I0_5	I1_4	I0_4
ISPR2	I1_11	I0_11	I1_10	I0_10	I1_9	I0_9	I1_8	I0_8
ISPR3	1	1	1	1	1	1	I1_12	I0_12

ISPRx registers contain the interrupt software priority of each interrupt vector. Each interrupt vector (except RESET and TRAP) has corresponding bits in these registers to define its software priority. This correspondence is shown in *Table 16*.

Each I1_x and I0_x bit value in the ISPRx registers has the same meaning as the I1 and I0 bits in the CC register.

The RESET and TRAP vectors have no software priorities. When one is serviced, the I1 and I0 bits of the CC register are both set.

Level 0 cannot be written (I1_x = 1, I0_x = 0). In this case, the previously stored value is kept (Example: previous = CFh, write = 64h, result = 44h).

Table 16. Interrupt vector vs. ISPRx bits

Vector address	ISPRx bits
FFFBh-FFFAh	I1_0 and I0_0 bits[1]
FFF9h-FFF8h	I1_1 and I0_1 bits
...	...
FFE1h-FFE0h	I1_13 and I0_13 bits

1. Bits in the ISPRx registers can be read and written but they are not significant in the interrupt process management.

Caution: If the I1_x and I0_x bits are modified while the interrupt x is executed the following behavior has to be considered: If the interrupt x is still pending (new interrupt or flag not cleared) and the new software priority is higher than the previous one, the interrupt x is re-entered. Otherwise, the software priority stays unchanged up to the next interrupt request (after the IRET of the interrupt x).

Table 17. Dedicated interrupt instruction set[1]

Instruction	New description	Function/example	I1	H	I0	N	Z	C
HALT	Entering Halt mode		1		0			
IRET	Interrupt routine return	Pop CC, A, X, PC	I1	H	I0	N	Z	C
JRM	Jump if I1:0 = 11 (level 3)	I1:0 = 11						
JRNM	Jump if I1:0 <> 11	I1:0 <> 11						
POP CC	Pop CC from the stack	Mem => CC	I1	H	I0	N	Z	C
RIM	Enable interrupt (level 0 set)	Load 10 in I1:0 of CC	1		0			
SIM	Disable interrupt (level 3 set)	Load 11 in I1:0 of CC	1		1			
TRAP	Software trap	Software NMI	1		1			
WFI	Wait for interrupt		1		0			

1. During the execution of an interrupt routine, the HALT, POPCC, RIM, SIM and WFI instructions change the current software priority up to the next IRET instruction or one of the previously mentioned instructions.

Table 18. ST7LITE49M interrupt mapping

Number	Source block	Description	Register label	Priority order	Exit from HALT or AWUFH (1)	Address vector
	RESET	Reset	N/A	Highest Priority	yes	FFFEh-FFFFh
	TRAP	Software interrupt			no	FFFCh-FFFDh
0	AWU	Auto-wakeup interrupt	AWUCSR		yes(2)	FFFAh-FFFBh
1	AVD	Auxiliary voltage detector interrupt	N/A		no	FFF8h-FFF9h
2	ei0	External interrupt 0 (Port A)	N/A		yes	FFF6h-FFF7
3	ei1	External interrupt 1 (Port B)				FFF4h-FFF5h
4	ei2	External interrupt 2 (Port C)				FFF2h-FFF3h
5	AT TIMER	AT timer output compare interrupt	ATCSR		no	FFF0h-FFF1h
6		AT timer input capture interrupt			no	FFEEh-FFEFh
7(3)		AT timer overflow 1 interrupt			no	FFECh-FFEDh
8		AT timer Overflow 2 interrupt			no	FFEAh-FFEBh
9	I^2C	I^2C interrupt	N/A		no	FFE8h-FFE9h
10 (3)	LITE TIMER	Lite timer RTC interrupt	LTCSR2	Lowest Priority	yes	FFE6h-FFE7h
11		Lite timer Input Capture interrupt			no	FFE4h-FFE5h
12		Lite timer RTC2 interrupt			no	FFE2h-FFE3h

1. For an interrupt, all events do not have the same capability to wake up the MCU from Halt, Active-halt or Auto-wakeup from Halt modes. Refer to the description of interrupt events for more details.
2. This interrupt exits the MCU from Auto Wake-up from Halt mode only.
3. These interrupts exit the MCU from Active-halt mode only.

8.5.3 External interrupt control register (EICR)

Reset value: 0000 0000 (00h)

7							0
0	0	IS21	IS20	IS11	IS10	IS01	IS00
Read/write							

Bits 7:6 = Reserved, must be kept cleared.

Bits 5:4 = **IS2[1:0]** *ei2 sensitivity bits*

These bits define the interrupt sensitivity for ei2 (Port C) according to *Table 19*.

Bits 3:2 = **IS1[1:0]** *ei1 sensitivity bits*

These bits define the interrupt sensitivity for ei1 (Port B) according to *Table 19*.

Bits 1:0 = **IS0[1:0]** *ei0 sensitivity bits*

These bits define the interrupt sensitivity for ei0 (Port A) according to *Table 19*.

Note: 1 These 8 bits can be written only when the I bit in the CC register is set.

2 Changing the sensitivity of a particular external interrupt clears this pending interrupt. This can be used to clear unwanted pending interrupts. Refer to Section : External interrupt function.

Table 19. Interrupt sensitivity bits

ISx1	ISx0	External interrupt sensitivity
0	0	Falling edge & low level
0	1	Rising edge only
1	0	Falling edge only
1	1	Rising and falling edge

9 Power saving modes

9.1 Introduction

To give a large measure of flexibility to the application in terms of power consumption, four main power saving modes are implemented in the ST7 (see *Figure 24*):

- Slow
- Wait (and Slow-wait)
- Active-halt
- Auto-wakeup from Halt (AWUFH)
- Halt

After a reset the normal operating mode is selected by default (Run mode). This mode drives the device (CPU and embedded peripherals) by means of a master clock which is based on the main oscillator frequency (f_{OSC}).

From Run mode, the different power saving modes may be selected by setting the relevant register bits or by calling the specific ST7 software instruction whose action depends on the oscillator status.

Figure 24. Power saving mode transitions

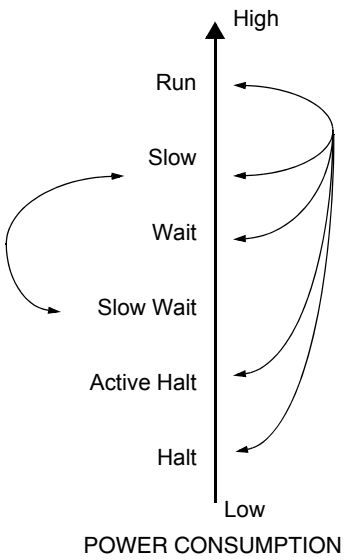

9.2 Slow mode

This mode has two targets:

- To reduce power consumption by decreasing the internal clock in the device,
- To adapt the internal clock frequency (f_{CPU}) to the available supply voltage.

Slow mode is controlled by the SMS bit in the MCCSR register which enables or disables Slow mode.

In this mode, the oscillator frequency is divided by 32. The CPU and peripherals are clocked at this lower frequency.

Note: Slow-wait mode is activated when entering Wait mode while the device is already in Slow mode.

Figure 25. Slow mode clock transition

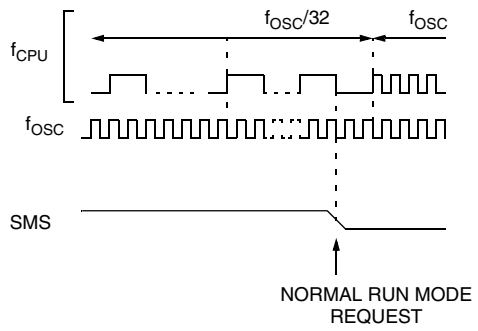

9.3 Wait mode

Wait mode places the MCU in a low power consumption mode by stopping the CPU.

This power saving mode is selected by calling the 'WFI' instruction.

All peripherals remain active. During Wait mode, the I bit of the CC register is cleared, to enable all interrupts. All other registers and memory remain unchanged. The MCU remains in Wait mode until an interrupt or reset occurs, whereupon the program counter branches to the starting address of the interrupt or reset service routine.

The MCU will remain in Wait mode until a reset or an interrupt occurs, causing it to wake up.

Refer to *Figure 26* for a description of the Wait mode flowchart.

Figure 26. Wait mode flowchart

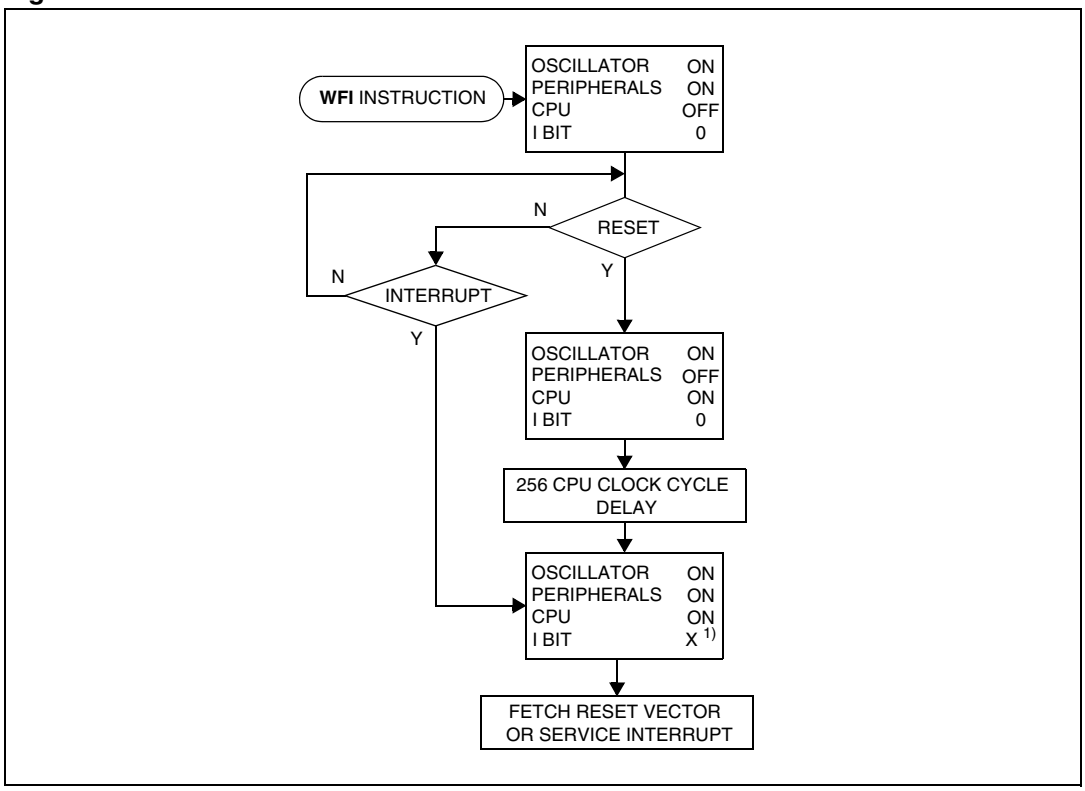

1. Before servicing an interrupt, the CC register is pushed on the stack. The I bit of the CC register is set during the interrupt routine and cleared when the CC register is popped.

9.4 Active-halt and Halt modes

Active-halt and Halt modes are the two lowest power consumption modes of the MCU. They are both entered by executing the 'HALT' instruction. The decision to enter either in Active-halt or Halt mode is given by the LTCSR/ATCSR register status as shown in the following table:

Table 20. Enabling/disabling Active-halt and Halt modes

LTCSR TBIE bit	ATCSR OVFIE bit	ATCSRCK1 bit	ATCSRCK0 bit	Meaning
0	x	x	0	Active-halt mode disabled
0	0	x	x	
0	1	1	1	
1	x	x	x	Active-halt mode enabled
x	1	0	1	

9.4.1 Active-halt mode

Active-halt mode is the lowest power consumption mode of the MCU with a real-time clock available. It is entered by executing the 'HALT' instruction when Active-halt mode is enabled.

The MCU can exit Active-halt mode on reception of a Lite timer/ AT timer interrupt or a reset.

- When exiting Active-halt mode by means of a reset, a 256 CPU cycle delay occurs. After the start up delay, the CPU resumes operation by fetching the reset vector which woke it up (see *Figure 28*).
- When exiting Active-halt mode by means of an interrupt, the CPU immediately resumes operation by servicing the interrupt vector which woke it up (see *Figure 28*).

When entering Active-halt mode, the I bit in the CC register is cleared to enable interrupts. Therefore, if an interrupt is pending, the MCU wakes up immediately.

In Active-halt mode, only the main oscillator and the selected timer counter (LT/AT) are running to keep a wakeup time base. All other peripherals are not clocked except those which get their clock supply from another clock generator (such as external or auxiliary oscillator).

Caution: As soon as Active-halt is enabled, executing a HALT instruction while the watchdog is active does not generate a reset if the WDGHALT bit is reset.
This means that the device cannot spend more than a defined delay in this power saving mode.

Figure 27. Active-halt timing overview

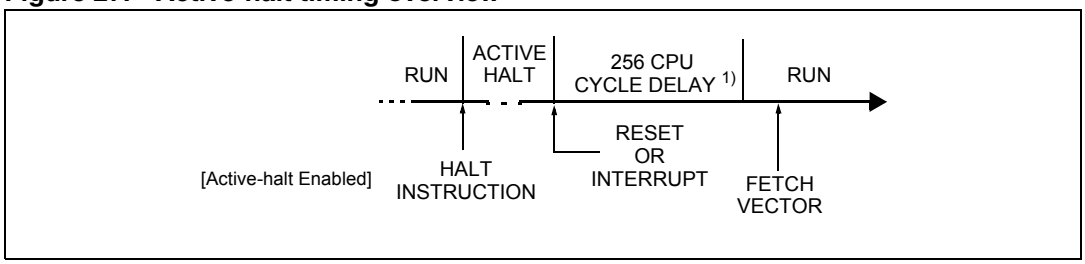

1. This delay occurs only if the MCU exits Active-halt mode by means of a RESET.

Figure 28. Active-halt mode flowchart

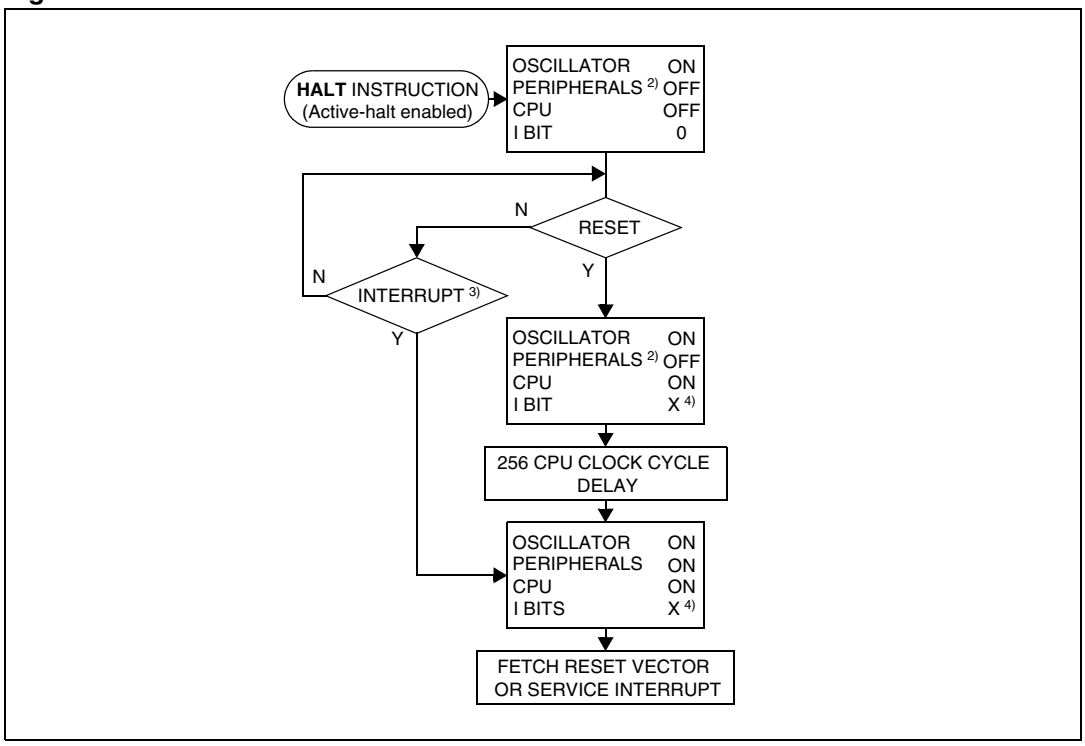

1. This delay occurs only if the MCU exits Active-halt mode by means of a RESET.
2. Peripherals clocked with an external clock source can still be active.
3. Only the Lite timer RTC and AT timer interrupts can exit the MCU from Active-halt mode.
4. Before servicing an interrupt, the CC register is pushed on the stack. The I bit of the CC register is set during the interrupt routine and cleared when the CC register is popped.

9.4.2 Halt mode

The Halt mode is the lowest power consumption mode of the MCU. It is entered by executing the HALT instruction when Active-halt mode is disabled.

The MCU can exit Halt mode on reception of either a specific interrupt (see *Table 18: ST7LITE49M interrupt mapping*) or a reset. When exiting Halt mode by means of a reset or an interrupt, the main oscillator is immediately turned on and the 256 CPU cycle delay is used to stabilize it. After the start up delay, the CPU resumes operation by servicing the interrupt or by fetching the reset vector which woke it up (see *Figure 30*).

When entering Halt mode, the I bit in the CC register is forced to 0 to enable interrupts. Therefore, if an interrupt is pending, the MCU wakes immediately.

In Halt mode, the main oscillator is turned off causing all internal processing to be stopped, including the operation of the on-chip peripherals. All peripherals are not clocked except the ones which get their clock supply from another clock generator (such as an external or auxiliary oscillator).

The compatibility of watchdog operation with Halt mode is configured by the “WDGHALT” option bit of the option byte. The HALT instruction when executed while the watchdog system is enabled, can generate a watchdog reset (see *Section 14.1: Option bytes* for more details).

Figure 29. Halt timing overview

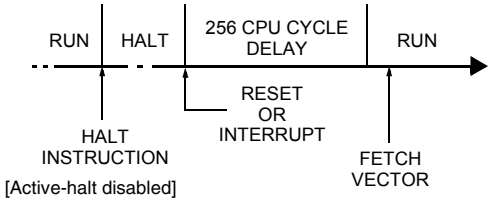

1. A reset pulse of at least 42 µs must be applied when exiting from Halt mode.

Figure 30. Halt mode flowchart

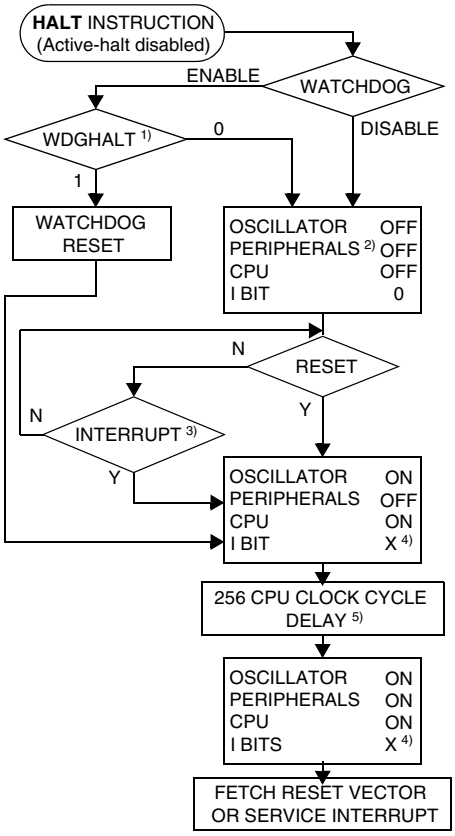

1. WDGHALT is an option bit. See option byte section for more details.
2. Peripheral clocked with an external clock source can still be active.
3. Only some specific interrupts can exit the MCU from Halt mode (such as external interrupt). Refer to *Table 18: ST7LITE49M interrupt mapping* for more details.
4. Before servicing an interrupt, the CC register is pushed on the stack. The I bit of the CC register is set during the interrupt routine and cleared when the CC register is popped.
5. The CPU clock must be switched to 1 MHz (RC/8) or AWU RC before entering Halt mode.

Halt mode recommendations

- Make sure that an external event is available to wake up the microcontroller from Halt mode.
- When using an external interrupt to wake up the microcontroller, reinitialize the corresponding I/O as “Input Pull-up with Interrupt” before executing the HALT instruction. The main reason for this is that the I/O may be wrongly configured due to external interference or by an unforeseen logical condition.
- For the same reason, reinitialize the level sensitiveness of each external interrupt as a precautionary measure.
- The opcode for the HALT instruction is 0x8E. To avoid an unexpected HALT instruction due to a Program Counter failure, it is advised to clear all occurrences of the data value 0x8E from memory. For example, avoid defining a constant in ROM with the value 0x8E.
- As the HALT instruction clears the I bit in the CC register to allow interrupts, the user may choose to clear all pending interrupt bits before executing the HALT instruction. This avoids entering other peripheral interrupt routines after executing the external interrupt routine corresponding to the wakeup event (reset or external interrupt).

9.5 Auto-wakeup from Halt mode

Auto-wakeup from Halt (AWUFH) mode is similar to Halt mode with the addition of a specific internal RC oscillator for wakeup (Auto-wakeup from Halt oscillator) which replaces the main clock which was active before entering Halt mode. Compared to Active-halt mode, AWUFH has lower power consumption (the main clock is not kept running), but there is no accurate real-time clock available.

It is entered by executing the HALT instruction when the AWUEN bit in the AWUCSR register has been set.

Figure 31. AWUFH mode block diagram

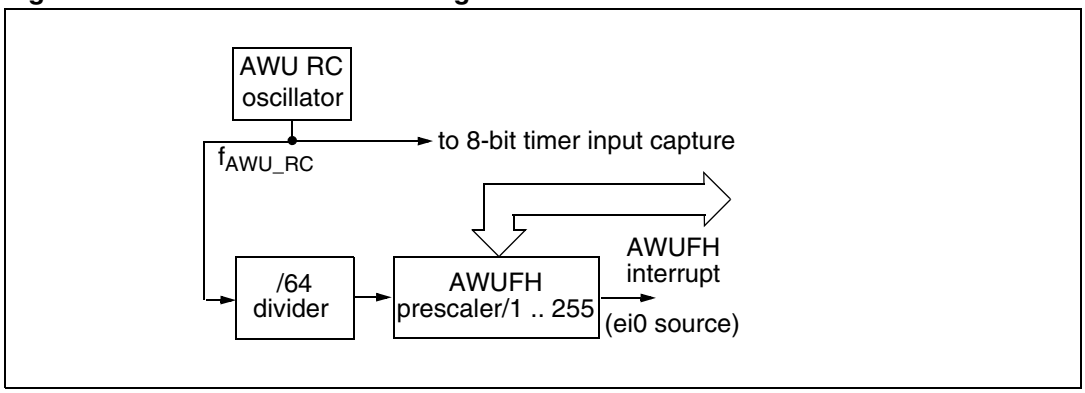

As soon as Halt mode is entered, and if the AWUEN bit has been set in the AWUCSR register, the AWU RC oscillator provides a clock signal (f_{AWU_RC}). Its frequency is divided by a fixed divider and a programmable prescaler controlled by the AWUPR register. The output of this prescaler provides the delay time. When the delay has elapsed, the following actions are performed:

- the AWUF flag is set by hardware,
- an interrupt wakes up the MCU from Halt mode,
- the main oscillator is immediately turned on and the 256 CPU cycle delay is used to stabilize it.

After this start-up delay, the CPU resumes operation by servicing the AWUFH interrupt. The AWU flag and its associated interrupt are cleared by software reading the AWUCSR register.

To compensate for any frequency dispersion of the AWU RC oscillator, it can be calibrated by measuring the clock frequency f_{AWU_RC} and then calculating the right prescaler value. Measurement mode is enabled by setting the AWUM bit in the AWUCSR register in Run mode. This connects f_{AWU_RC} to the input capture of the 8-bit Lite timer, allowing the f_{AWU_RC} to be measured using the main oscillator clock as a reference timebase.

Similarities with Halt mode

The following AWUFH mode behavior is the same as normal Halt mode:

- The MCU can exit AWUFH mode by means of any interrupt with exit from Halt capability or a reset (see *Section 9.4: Active-halt and Halt modes*).
- When entering AWUFH mode, the I bit in the CC register is forced to 0 to enable interrupts. Therefore, if an interrupt is pending, the MCU wakes up immediately.
- In AWUFH mode, the main oscillator is turned off causing all internal processing to be stopped, including the operation of the on-chip peripherals. None of the peripherals are clocked except those which get their clock supply from another clock generator (such as an external or auxiliary oscillator like the AWU oscillator).
- The compatibility of watchdog operation with AWUFH mode is configured by the WDGHALT option bit in the option byte. Depending on this setting, the HALT instruction when executed while the watchdog system is enabled, can generate a watchdog reset.

Figure 32. AWUF Halt timing diagram

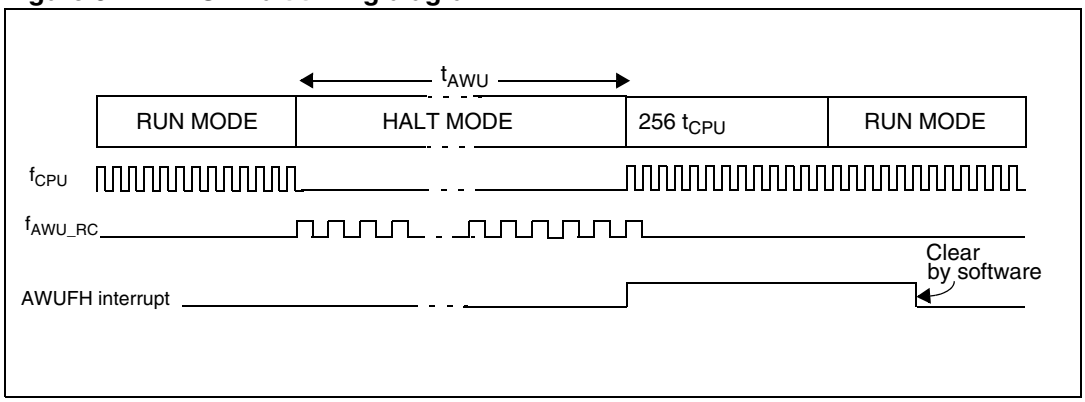

Figure 33. AWUFH mode flowchart

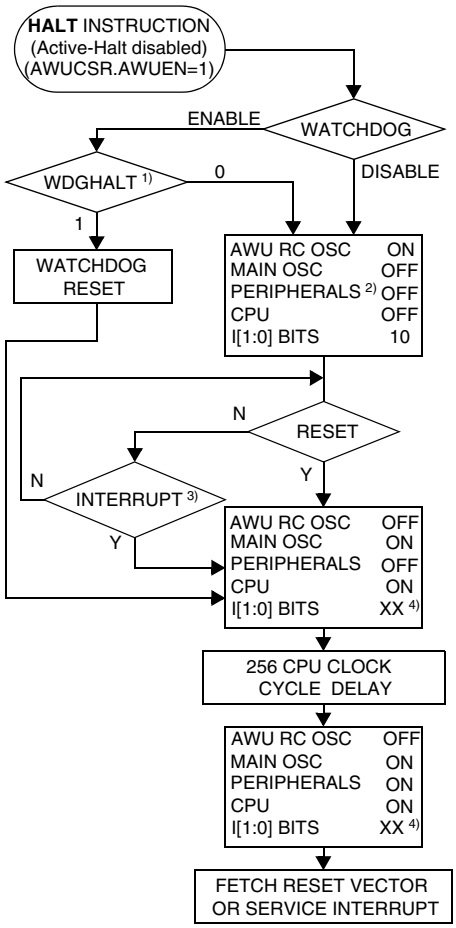

1. WDGHALT is an option bit. See option byte section for more details.
2. Peripheral clocked with an external clock source can still be active.
3. Only an AWUFH interrupt and some specific interrupts can exit the MCU from Halt mode (such as external interrupt). Refer to *Table 18: ST7LITE49M interrupt mapping* for more details.
4. Before servicing an interrupt, the CC register is pushed on the stack. The I[1:0] bits of the CC register are set to the current software priority level of the interrupt routine and recovered when the CC register is popped.

9.5.1 Register description

9.5.2 AWUFH control/status register (AWUCSR)

Reset value: 0000 0000 (00h)

7							0
0	0	0	0	0	AWUF	AWUM	AWUEN
Read/Write							

Bits 7:3 = Reserved

Bit 2 = **AWUF** *Auto-wakeup flag*

This bit is set by hardware when the AWU module generates an interrupt and cleared by software on reading AWUCSR. Writing to this bit does not change its value.

0: No AWU interrupt occurred

1: AWU interrupt occurred

Bit 1 = **AWUM** *Auto-wakeup measurement bit*

This bit enables the AWU RC oscillator and connects its output to the Input Capture of the 8-bit Lite timer. This allows the timer to be used to measure the AWU RC oscillator dispersion and then compensate this dispersion by providing the right value in the AWUPRE register.

0: Measurement disabled

1: Measurement enabled

Bit 0 = **AWUEN** *Auto-wakeup from Halt enabled bit*

This bit enables the Auto-wakeup from halt feature: once Halt mode is entered, the AWUFH wakes up the microcontroller after a time delay dependent on the AWU prescaler value. It is set and cleared by software.

0: AWUFH (Auto-wakeup from Halt) mode disabled

1: AWUFH (Auto-wakeup from Halt) mode enabled

Note: Whatever the clock source, this bit should be set to enable the AWUFH mode once the HALT instruction has been executed.

9.5.3 AWUFH prescaler register (AWUPR)

Reset value: 1111 1111 (FFh)

7							0
AWUPR7	AWUPR6	AWUPR5	AWUPR4	AWUPR3	AWUPR2	AWUPR1	AWUPR0
Read/Write							

Bits 7:0= **AWUPR[7:0]** *Auto-wakeup prescaler*

These 8 bits define the AWUPR dividing factor (see *Table 21*).

Table 21. Configuring the dividing factor

AWUPR[7:0]	Dividing factor
00h	Forbidden
01h	1
...	...
FEh	254
FFh	255

In AWU mode, the time during which the MCU stays in Halt mode, t_{AWU}, is given by the equation below. See also *Figure 32 on page 64*.

$$t_{AWU} = 64 \times AWUPR \times \frac{1}{f_{AWURC}} + t_{RCSTRT}$$

The AWUPR prescaler register can be programmed to modify the time during which the MCU stays in Halt mode before waking up automatically.

Note: If 00h is written to AWUPR, the AWUPR remains unchanged.

Table 22. AWU register mapping and reset values

Address (Hex.)	Register label	7	6	5	4	3	2	1	0
0048h	**AWUCSR** Reset value	0	0	0	0	0	AWUF	AWUM	AWUEN
0049h	**AWUPR** Reset value	AWUPR7 1	AWUPR6 1	AWUPR5 1	AWUPR4 1	AWUPR3 1	AWUPR2 1	AWUPR1 1	AWUPR0 1

10 I/O ports

10.1 Introduction

The I/O ports allow data transfer. An I/O port can contain up to 8 pins. Each pin can be programmed independently either as a digital input or digital output. In addition, specific pins may have several other functions. These functions can include external interrupt, alternate signal input/output for on-chip peripherals or analog input.

10.2 Functional description

A data register (DR) and a data direction register (DDR) are always associated with each port. The Option register (OR), which allows input/output options, may or may not be implemented. The following description takes into account the OR register. Refer to the port configuration table for device specific information.

An I/O pin is programmed using the corresponding bits in the DDR, DR and OR registers: bit x corresponding to pin x of the port.

Figure 34 shows the generic I/O block diagram.

10.2.1 Input modes

Clearing the DDRx bit selects input mode. In this mode, reading its DR bit returns the digital value from that I/O pin.

If an OR bit is available, different input modes can be configured by software: floating or pull-up. Refer to I/O Port Implementation section for configuration.

Note: 1 Writing to the DR modifies the latch value but does not change the state of the input pin.

2 Do not use read/modify/write instructions (BSET/BRES) to modify the DR register.

External interrupt function

Depending on the device, setting the ORx bit while in input mode can configure an I/O as an input with interrupt. In this configuration, a signal edge or level input on the I/O generates an interrupt request via the corresponding interrupt vector (eix).

Falling or rising edge sensitivity is programmed independently for each interrupt vector. The External Interrupt Control register (EICR) or the Miscellaneous register controls this sensitivity, depending on the device.

Each external interrupt vector is linked to a dedicated group of I/O port pins (see pinout description and interrupt section). If several I/O interrupt pins on the same interrupt vector are selected simultaneously, they are logically combined. For this reason if one of the interrupt pins is tied low, it may mask the others.

External interrupts are hardware interrupts. Fetching the corresponding interrupt vector automatically clears the request latch. Changing the sensitivity of a particular external interrupt clears this pending interrupt. This can be used to clear unwanted pending interrupts.

Spurious interrupts

When enabling/disabling an external interrupt by setting/resetting the related OR register bit, a spurious interrupt is generated if the pin level is low and its edge sensitivity includes falling/rising edge. This is due to the edge detector input which is switched to '1' when the external interrupt is disabled by the OR register.

To avoid this unwanted interrupt, a "safe" edge sensitivity (rising edge for enabling and falling edge for disabling) has to be selected before changing the OR register bit and configuring the appropriate sensitivity again.

Caution: In case a pin level change occurs during these operations (asynchronous signal input), as interrupts are generated according to the current sensitivity, it is advised to disable all interrupts before and to reenable them after the complete previous sequence in order to avoid an external interrupt occurring on the unwanted edge.

This corresponds to the following steps:

a) Set the interrupt mask with the SIM instruction (in cases where a pin level change could occur)
b) Select rising edge
c) Enable the external interrupt through the OR register
d) Select the desired sensitivity if different from rising edge
e) Reset the interrupt mask with the RIM instruction (in cases where a pin level change could occur)

2. To disable an external interrupt:

a) Set the interrupt mask with the SIM instruction SIM (in cases where a pin level change could occur)
b) Select falling edge
c) Disable the external interrupt through the OR register
d) Select rising edge
e) Reset the interrupt mask with the RIM instruction (in cases where a pin level change could occur)

10.2.2 Output modes

Setting the DDRx bit selects output mode. Writing to the DR bits applies a digital value to the I/O through the latch. Reading the DR bits returns the previously stored value.

If an OR bit is available, different output modes can be selected by software: push-pull or open-drain. Refer to I/O Port Implementation section for configuration.

Table 23. DR value and output pin status

DR	Push-pull	Open-drain
0	V_{OL}	V_{OL}
1	V_{OH}	Floating

10.2.3 Alternate functions

Many ST7s I/Os have one or more alternate functions. These may include output signals from, or input signals to, on-chip peripherals. *Table 2* describes which peripheral signals can be input/output to which ports.

A signal coming from an on-chip peripheral can be output on an I/O. To do this, enable the on-chip peripheral as an output (enable bit in the peripheral's control register). The peripheral configures the I/O as an output and takes priority over standard I/O programming. The I/O's state is readable by addressing the corresponding I/O data register.

Configuring an I/O as floating enables alternate function input. It is not recommended to configure an I/O as pull-up as this will increase current consumption. Before using an I/O as an alternate input, configure it without interrupt. Otherwise spurious interrupts can occur.

Configure an I/O as input floating for an on-chip peripheral signal which can be input and output.

Caution: I/Os which can be configured as both an analog and digital alternate function need special attention. The user must control the peripherals so that the signals do not arrive at the same time on the same pin. If an external clock is used, only the clock alternate function should be employed on that I/O pin and not the other alternate function.

Figure 34. I/O port general block diagram

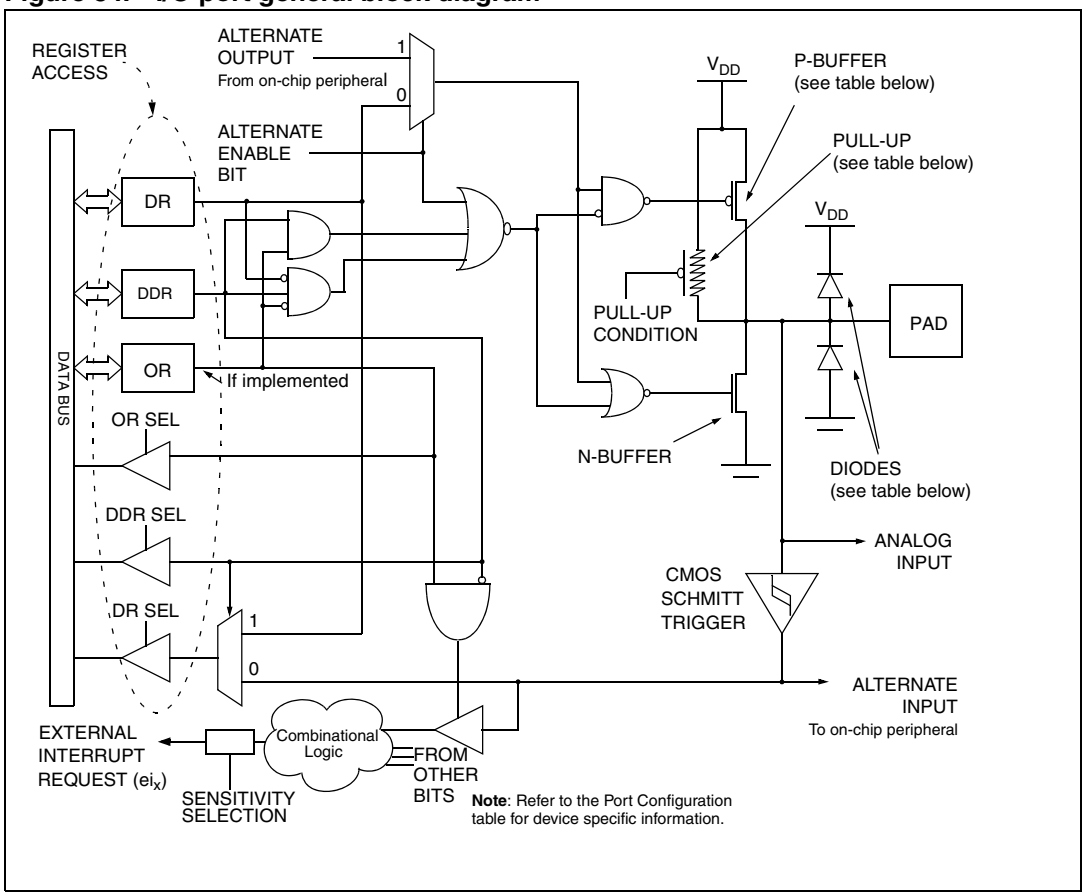

Table 24. I/O port mode options (1)

Configuration mode		Pull-up	P-buffer	Diodes	
				to V_{DD}	to V_{SS}
Input	Floating with/without Interrupt	Off	Off	On	On
	Pull-up with Interrupt	On			
Output	Push-pull	Off	On		
	Open-drain (logic level)		Off		

1. Off means implemented not activated, On means implemented and activated.

Table 25. I/O port configuration

	Hardware configuration
INPUT (1)	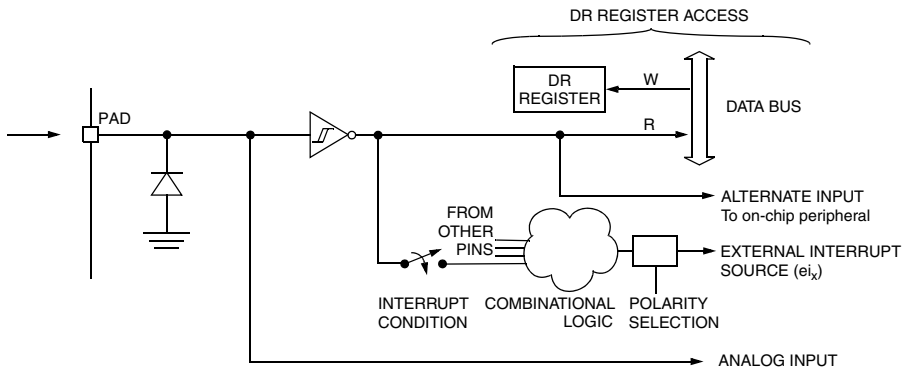
OPEN-DRAIN OUTPUT(2)	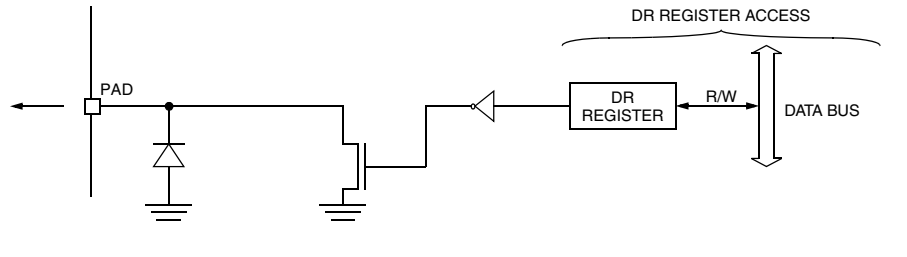
PUSH-PULL OUTPUT(2)	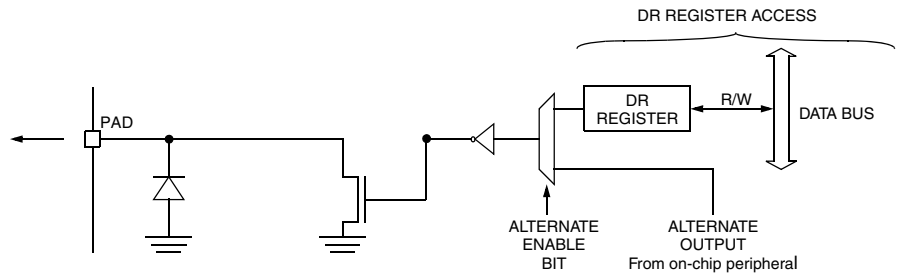

1. When the I/O port is in input configuration and the associated alternate function is enabled as an output, reading the DR register will read the alternate function output status.
2. When the I/O port is in output configuration and the associated alternate function is enabled as an input, the alternate function reads the pin status given by the DR register content.

10.2.4 Analog alternate function

Configure the I/O as floating input to use an ADC input. The analog multiplexer (controlled by the ADC registers) switches the analog voltage present on the selected pin to the common analog rail, connected to the ADC input.

Analog Recommendations

Do not change the voltage level or loading on any I/O while conversion is in progress. Do not have clocking pins located close to a selected analog pin.

Caution: The analog input voltage level must be within the limits stated in the absolute maximum ratings.

10.3 I/O port implementation

The hardware implementation on each I/O port depends on the settings in the DDR and OR registers and specific I/O port features such as ADC input or open-drain.

Switching these I/O ports from one state to another should be done in a sequence that prevents unwanted side effects. Recommended safe transitions are illustrated in *Figure 35*. Other transitions are potentially risky and should be avoided, since they may present unwanted side-effects such as spurious interrupt generation.

Figure 35. Interrupt I/O port state transitions

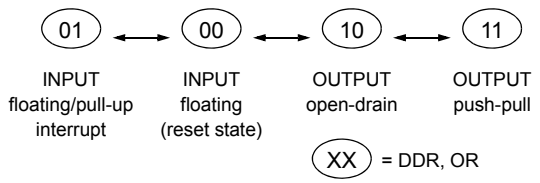

10.4 Unused I/O pins

Unused I/O pins must be connected to fixed voltage levels. Refer to *Section 13.9: I/O port pin characteristics*.

10.5 Low power modes

Table 26. Effect of low power modes on I/O ports

Mode	Description
Wait	No effect on I/O ports. External interrupts cause the device to exit from Wait mode.
Halt	No effect on I/O ports. External interrupts cause the device to exit from Halt mode.

10.6 Interrupts

The external interrupt event generates an interrupt if the corresponding configuration is selected with DDR and OR registers and if the I bit in the CC register is cleared (RIM instruction).

Table 27. Description of interrupt events

Interrupt event	Event flag	Enable control bit	Exit from Wait	Exit from Halt
External interrupt on selected external event	-	DDRx ORx	Yes	Yes

See application notes AN1045 software implementation of I^2C bus master, and AN1048 - software LCD driver

10.7 Device-specific I/O port configuration

The I/O port register configurations are summarized in *Section 10.7.1: Standard ports* and *Section 10.7.2: Other ports*.

10.7.1 Standard ports

Table 28. PA5:0, PB7:0, PC7:4 and PC2:0 pins

Mode	DDR	OR
floating input	0	0
pull-up interrupt input	0	1
open-drain output	1	0
push-pull output	1	1

10.7.2 Other ports

Table 29. PA7:6 pins

Mode	DDR	OR
floating input	0	0
interrupt input	0	1
open-drain output	1	0
push-pull output	1	1

Table 30. PC3 pin

Mode	DDR	OR
floating input	0	0
pull-up input	0	1

Table 30. PC3 pin (continued)

Mode	DDR	OR
open-drain output	1	0
push-pull output	1	1

Table 31. Port configuration

Port	Pin name	Input		Output	
		OR = 0	OR = 1	OR = 0	OR = 1
Port A	PA5:0	floating	pull-up interrupt	open-drain	push-pull
	PA7:6	floating	interrupt	true open-drain	
Port B	PB7:0	floating	pull-up interrupt	open-drain	push-pull
Port C	PC7:4, PC2:0	floating	pull-up interrupt	open-drain	push-pull
	PC3	floating	pull-up	open-drain	push-pull

Table 32. I/O port register mapping and reset values

Address (Hex.)	Register label	7	6	5	4	3	2	1	0
0000h	PADR Reset value	MSB 0	0	0	0	0	0	0	LSB 0
0001h	PADDR Reset value	MSB 0	0	0	0	0	0	0	LSB 0
0002h	PAOR Reset value	MSB 0	0	0	0	0	0	0	LSB 0
0003h	PBDR Reset value	MSB 0	0	0	0	0	0	0	LSB 0
0004h	PBDDR Reset value	MSB 0	0	0	0	0	0	0	LSB 0
0005h	PBOR Reset value	MSB 0	0	0	0	0	0	0	LSB 0
0006h	PCDR Reset value	MSB 0	0	0	0	0	0	0	LSB 0
0007h	PCDDR Reset value	MSB 0	0	0	0	0	0	0	LSB 0
0008h	PCOR Reset value	MSB 0	0	0	0	1	0	0	LSB 0

11 On-chip peripherals

11.1 Watchdog timer (WDG)

11.1.1 Introduction

The watchdog timer is used to detect the occurrence of a software fault, usually generated by external interference or by unforeseen logical conditions, which causes the application program to abandon its normal sequence. The watchdog circuit generates an MCU reset on expiry of a programmed time period, unless the program refreshes the counter's contents before the T6 bit becomes cleared.

11.1.2 Main features

- Programmable free-running downcounter (64 increments of 16000 CPU cycles)
- Programmable reset
- Reset (if watchdog activated) when the T6 bit reaches zero
- Optional reset on HALT instruction (configurable by option byte)
- Hardware Watchdog selectable by option byte

11.1.3 Functional description

The counter value stored in the CR register (bits T[6:0]), is decremented every 16000 machine cycles, and the length of the timeout period can be programmed by the user in 64 increments.

If the watchdog is activated (the WDGA bit is set) and when the 7-bit timer (bits T[6:0]) rolls over from 40h to 3Fh (T6 becomes cleared), it initiates a reset cycle pulling low the $\overline{\text{RESET}}$ pin for typically 30 µs.

Figure 36. Watchdog block diagram

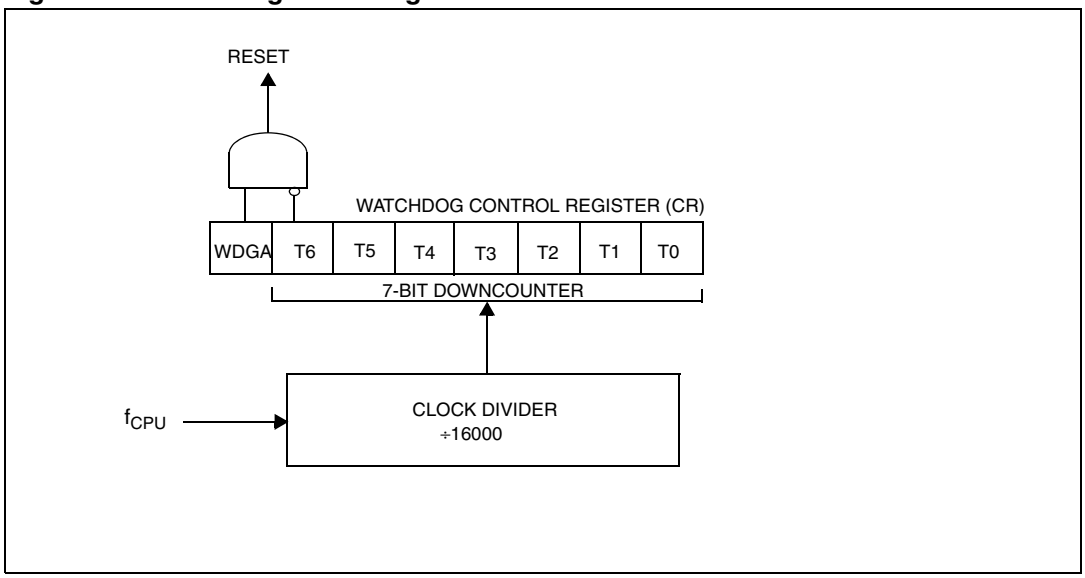

The application program must write in the CR register at regular intervals during normal operation to prevent an MCU reset. This downcounter is free-running: it counts down even if the watchdog is disabled. The value to be stored in the CR register must be between FFh and C0h (see *Table 33: Watchdog timing*):

- The WDGA bit is set (watchdog enabled)
- The T6 bit is set to prevent generating an immediate reset
- The T[5:0] bits contain the number of increments which represents the time delay before the watchdog produces a reset.

Following a reset, the watchdog is disabled. Once activated it cannot be disabled, except by a reset.

The T6 bit can be used to generate a software reset (the WDGA bit is set and the T6 bit is cleared).

If the watchdog is activated, the HALT instruction will generate a reset.

Table 33. Watchdog timing (1)(2)

f_{CPU} = 8 MHz		
WDG counter code	**min [ms]**	**max [ms]**
C0h	1	2
FFh	127	128

1. The timing variation shown in *Table 33* is due to the unknown status of the prescaler when writing to the CR register.
2. The number of CPU clock cycles applied during the reset phase (256 or 4096) must be taken into account in addition to these timings.

11.1.4 Hardware watchdog option

If Hardware Watchdog is selected by option byte, the watchdog is always active and the WDGA bit in the CR is not used.

Refer to the option byte description in *Section 14 on page 173*.

Using Halt mode with the WDG (WDGHALT option)

If Halt mode with Watchdog is enabled by option byte (No watchdog reset on HALT instruction), it is recommended before executing the HALT instruction to refresh the WDG counter, to avoid an unexpected WDG reset immediately after waking up the microcontroller. Same behavior in Active-halt mode.

11.1.5 Interrupts

None.

11.1.6 Register description

Control register (WDGCR)

Reset value: 0111 1111 (7Fh)

7							0
WDGA	T6	T5	T4	T3	T2	T1	T0
Read/Write							

Bit 7 = **WDGA** *Activation bit*

This bit is set by software and only cleared by hardware after a reset. When WDGA = 1, the watchdog can generate a reset.

0: Watchdog disabled

1: Watchdog enabled

Note: This bit is not used if the hardware watchdog option is enabled by option byte.

Bits 6:0 = **T[6:0]** *7-bit timer (MSB to LSB)*

These bits contain the decremented value. A reset is produced when it rolls over from 40h to 3Fh (T6 becomes cleared).

Table 34. Watchdog timer register mapping and reset values

Address (Hex.)	Register label	7	6	5	4	3	2	1	0
0033h	WDGCR Reset value	WDGA 0	T6 1	T5 1	T4 1	T3 1	T2 1	T1 1	T0 1

11.2 Dual 12-bit autoreload timer

11.2.1 Introduction

The 12-bit autoreload timer can be used for general-purpose timing functions. It is based on one or two free-running 12-bit upcounters with an input capture register and four PWM output channels. There are 7 external pins:

- Four PWM outputs
- ATIC/LTIC pins for the input capture function
- BREAK pin for forcing a break condition on the PWM outputs

11.2.2 Main features

- Single timer or dual timer mode with two 12-bit upcounters (CNTR1/CNTR2) and two 12-bit autoreload registers (ATR1/ATR2)
- Maskable overflow interrupts
- PWM mode
  - Generation of four independent PWMx signals
  - Dead time generation for Half bridge driving mode with programmable dead time
  - Frequency 2 kHz - 4 MHz (@ 8 MHz f_{CPU})
  - Programmable duty-cycles
  - Polarity control
  - Programmable output modes
- Output Compare mode
- Input Capture mode
  - 12-bit input capture register (ATICR)
  - Triggered by rising and falling edges
  - Maskable IC interrupt
  - Long range input capture
- Internal/external break control
- Flexible clock control
- One-pulse mode on PWM2/3
- Force update

Figure 37. Single timer mode (ENCNTR2=0)

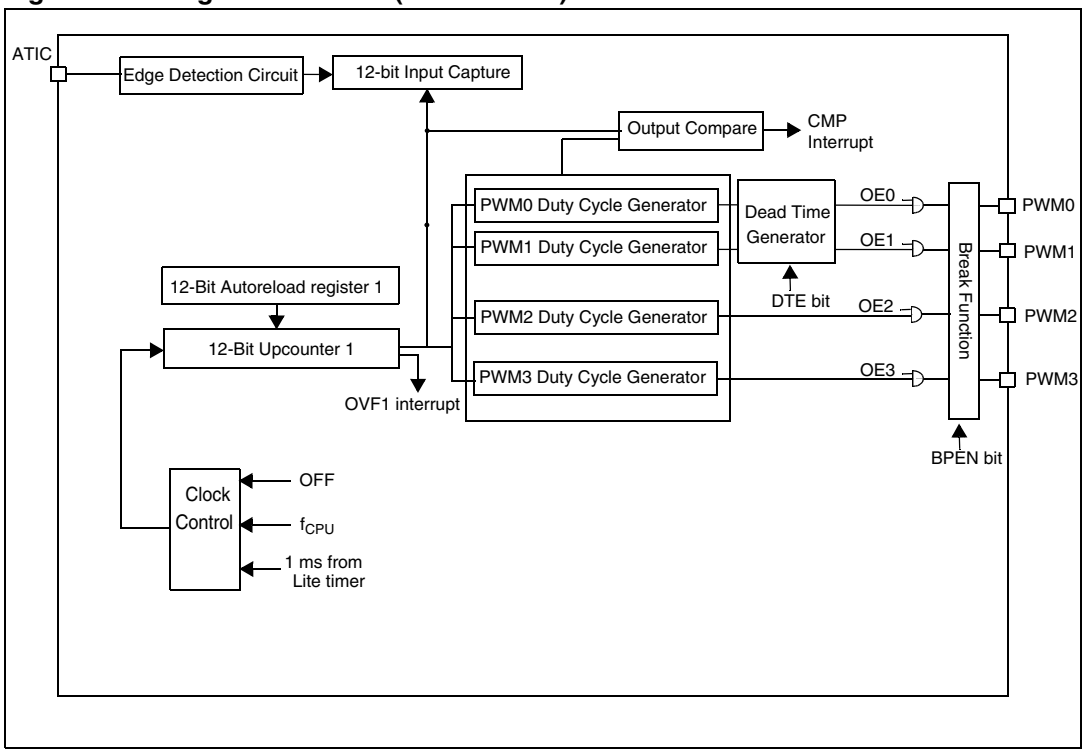

Figure 38. Dual timer mode (ENCNTR2=1)

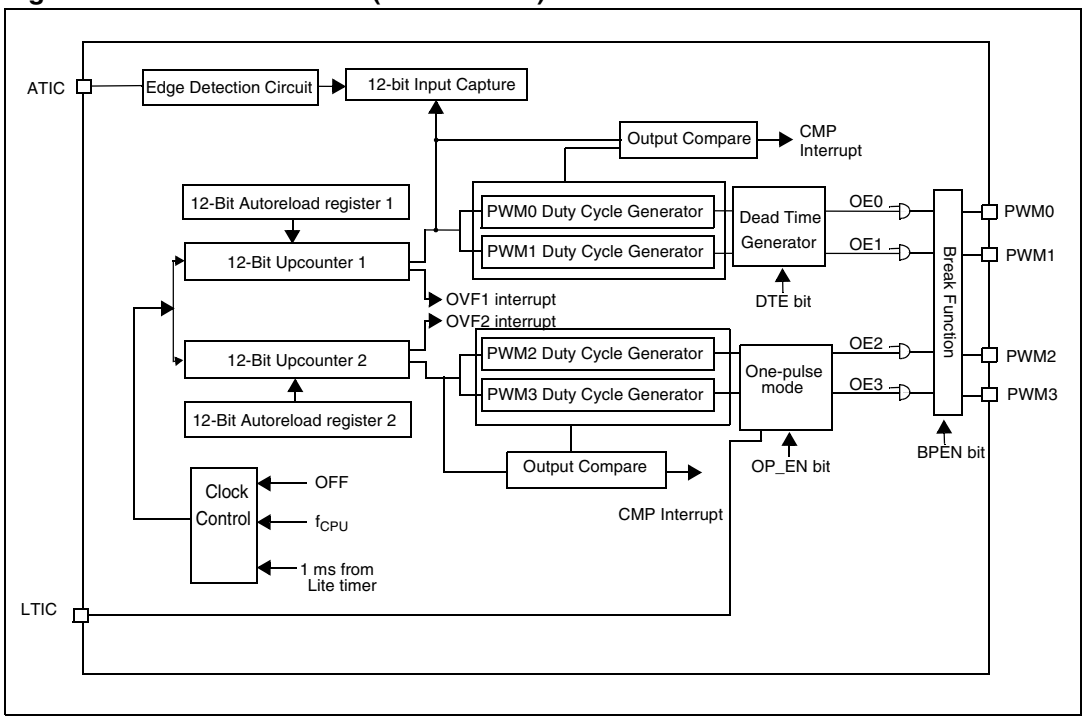

11.2.3 Functional description

PWM mode

This mode allows up to four pulse width modulated signals to be generated on the PWMx output pins.

- **PWM frequency**

  The four PWM signals can have the same frequency (f_{PWM}) or can have two different frequencies. This is selected by the ENCNTR2 bit which enables Single timer or Dual timer mode (see *Figure 37* and *Figure 38*). The frequency is controlled by the counter period and the ATR register value. In Dual timer mode, PWM2 and PWM3 can be generated with a different frequency controlled by CNTR2 and ATR2.

  $$f_{PWM} = f_{COUNTER} / (4096 - ATR)$$

  Following the above formula, if $f_{COUNTER}$ equals 4 MHz, the maximum value of f_{PWM} is 2 MHz (ATR register value = 4094), and the minimum value is 1 kHz (ATR register value = 0).

  The maximum value of ATR is 4094 because it must be lower than the DC4R value which must be 4095 in this case.

  To update the DCRx registers at 32 MHz, the following precautions must be taken:

  – If the PWM frequency is < 1 MHz and the TRANx bit is set asynchronously, it should be set twice after a write to the DCRx registers.

  – If the PWM frequency is > 1 MHz, the TRANx bit should be set along with FORCEx bit with the same instruction (use a load instruction and not 2 bset instructions).

- **Duty cycle**

  The duty cycle is selected by programming the DCRx registers. These are preload registers. The DCRx values are transferred in Active duty cycle registers after an overflow event if the corresponding transfer bit (TRANx bit) is set.

  The TRAN1 bit controls the PWMx outputs driven by counter 1 and the TRAN2 bit controls the PWMx outputs driven by counter 2.

  PWM generation and output compare are done by comparing these active DCRx values with the counter.

  The maximum available resolution for the PWMx duty cycle is:

  $$Resolution = 1 / (4096 - ATR)$$

  where ATR is equal to 0. With this maximum resolution, 0% and 100% duty cycle can be obtained by changing the polarity.

  At reset, the counter starts counting from 0.

  When a upcounter overflow occurs (OVF event), the preloaded Duty cycle values are transferred to the active Duty Cycle registers and the PWMx signals are set to a high level. When the upcounter matches the active DCRx value the PWMx signals are set to a low level. To obtain a signal on a PWMx pin, the contents of the corresponding active DCRx register must be greater than the contents of the ATR register.

The maximum value of ATR is 4094 because it must be lower than the DCR value which must be 4095 in this case.

- **Polarity inversion**

  The polarity bits can be used to invert any of the four output signals. The inversion is synchronized with the counter overflow if the corresponding transfer bit in the ATCSR2 register is set (reset value). See *Figure 39*.

Figure 39. PWM polarity inversion

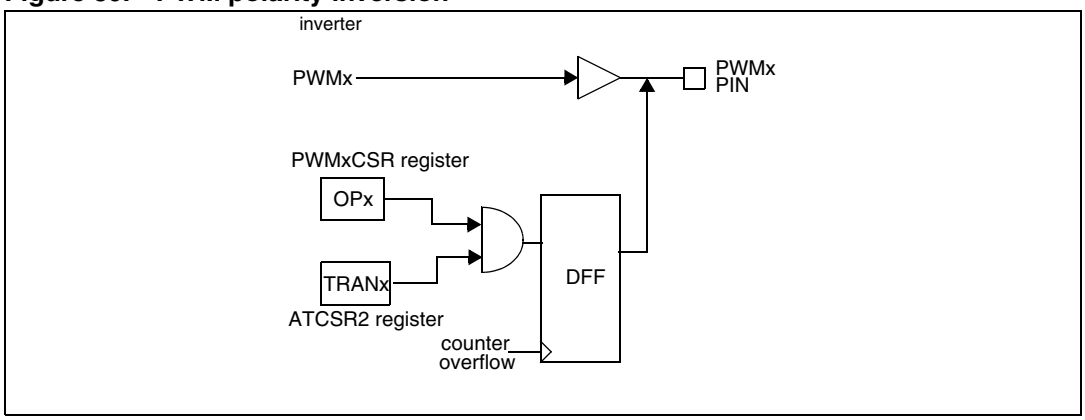

The data flip flop (DFF) applies the polarity inversion when triggered by the counter overflow input.

- **Output control**

  The PWMx output signals can be enabled or disabled using the OEx bits in the PWMCR register.

Figure 40. PWM function

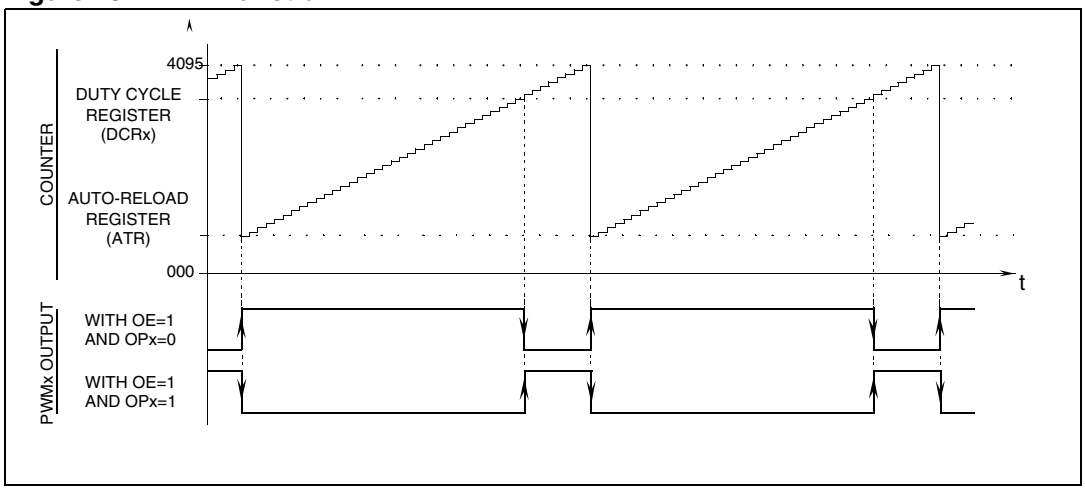

Figure 41. PWM signal from 0% to 100% duty cycle

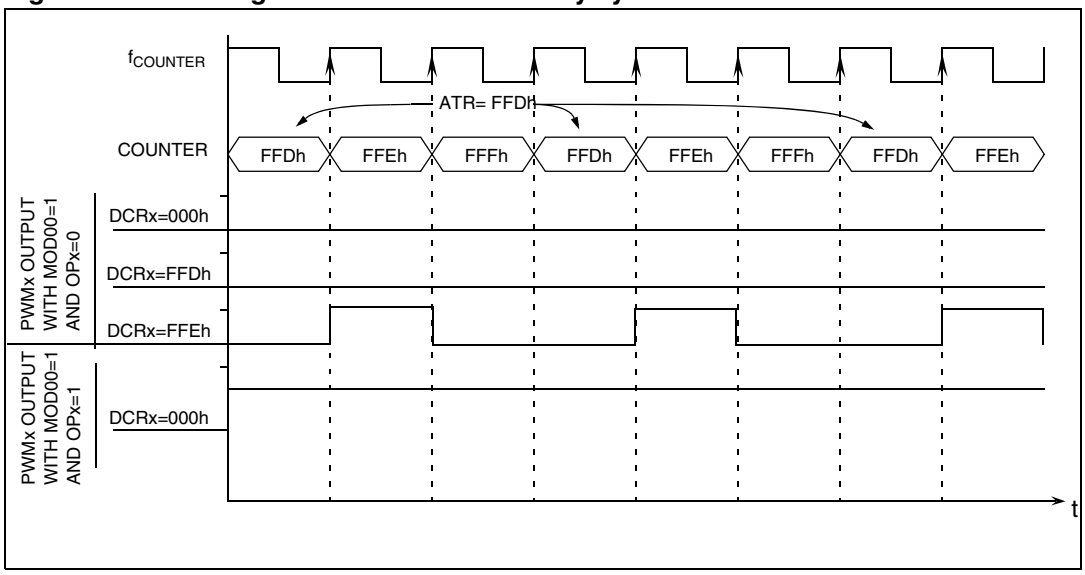

Dead time generation

A dead time can be inserted between PWM0 and PWM1 using the DTGR register. This is required for half-bridge driving where PWM signals must not be overlapped. The non-overlapping PWM0/PWM1 signals are generated through a programmable dead time by setting the DTE bit.

$$\text{Dead time} = DT[6:0] \times Tcounter1$$

DTGR[7:0] is buffered inside so as to avoid deforming the current PWM cycle. The DTGR effect will take place only after an overflow.

Note: 1 Dead time is generated only when DTE=1 and DT[6:0] ≠ 0. If DTE is set and DT[6:0]=0, PWM output signals will be at their reset state.

2 Half Bridge driving is possible only if polarities of PWM0 and PWM1 are not inverted, i.e. if OP0 and OP1 are not set. If polarity is inverted, overlapping PWM0/PWM1 signals will be generated.

3 Dead time generation does not work at 1ms timebase.

Figure 42. Dead time generation

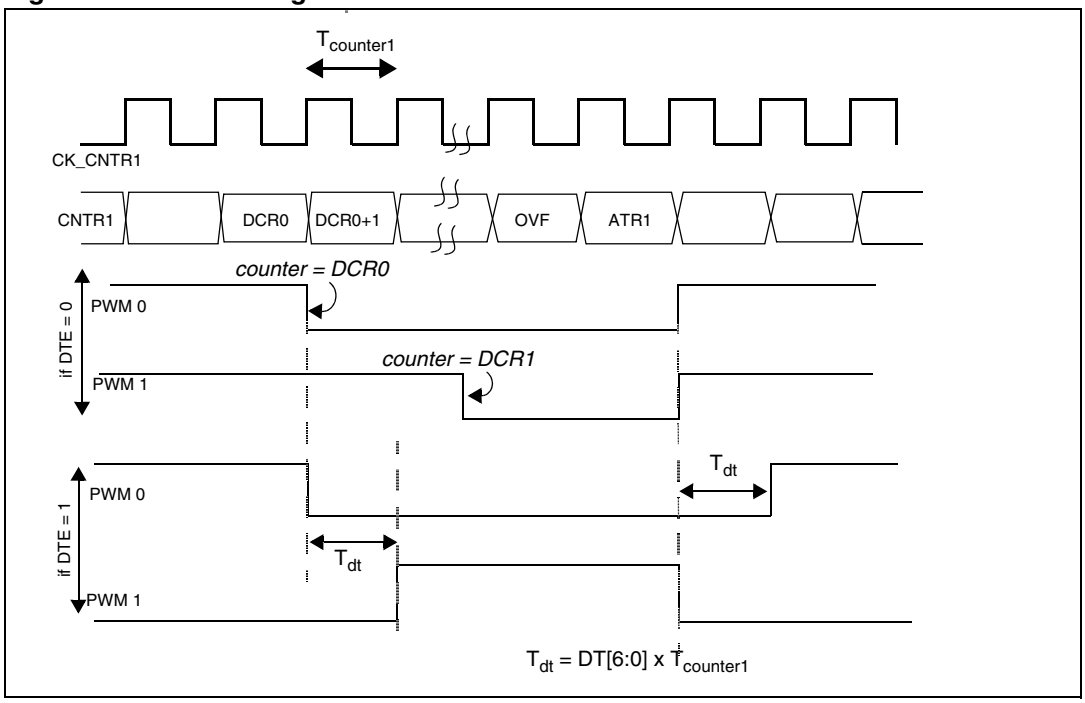

In the above example, when the DTE bit is set:

- PWM goes low at DCR0 match and goes high at ATR1+Tdt
- PWM1 goes high at DCR0+Tdt and goes low at ATR match.

With this programmable delay (Tdt), the PWM0 and PWM1 signals which are generated are not overlapped.

Break function

The break function can be used to perform an emergency shutdown of the application being driven by the PWM signals.

The break function is activated by the external BREAK pin. This can be selected by using the BRSEL bit in BREAKCR register. In order to use the break function it must be previously enabled by software setting the BPEN bit in the BREAKCR register.

The Break active level can be programmed by the BREDGE bit in the BREAKCR register. When an active level is detected on the BREAK pin, the BA bit is set and the break function is activated. In this case, the PWM signals are forced to BREAK value if respective OEx bit is set in PWMCR register.

Software can set the BA bit to activate the break function without using the BREAK pin. The BREN1 and BREN2 bits in the BREAKEN register are used to enable the break activation on the 2 counters respectively. In Dual Timer mode, the break for PWM2 and PWM3 is enabled by the BREN2 bit. In Single timer mode, the BREN1 bit enables the break for all PWM channels.

When a break function is activated (BA bit =1 and BREN1/BREN2 =1):

- The break pattern (PWM[3:0] bits in the BREAKCR) is forced directly on the PWMx output pins if respective OEx is set. (after the inverter).
- The 12-bit PWM counter CNTR1 is put to its reset value, i.e. 00h (if BREN1 = 1).
- The 12-bit PWM counter CNTR2 is put to its reset value,i.e. 00h (if BREN2 = 1).
- ATR1, ATR2, preload and active DCRx are put to their reset values.
- Counters stop counting.

When the break function is deactivated after applying the break (BA bit goes from 1 to 0 by software), Timer takes the control of PWM ports.

Figure 43. ST7LITE49M block diagram of break function

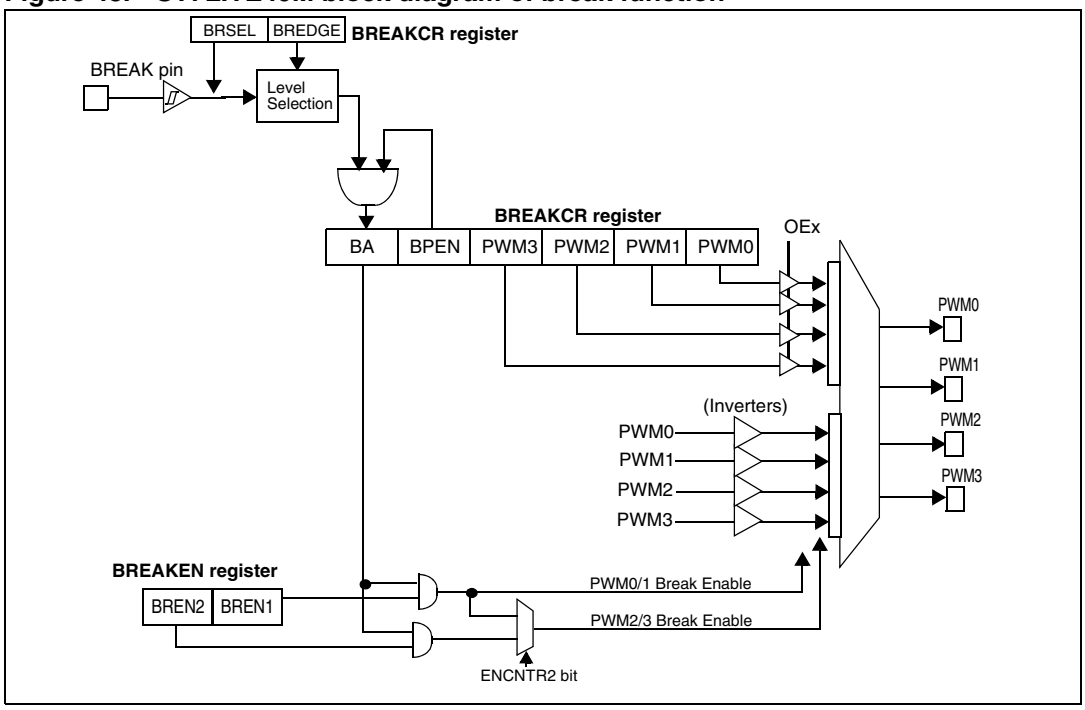

Output compare mode

To use this function, load a 12-bit value in the Preload DCRxH and DCRxL registers.

When the 12-bit upcounter CNTR1 reaches the value stored in the Active DCRxH and DCRxL registers, the CMPFx bit in the PWMxCSR register is set and an interrupt request is generated if the CMPIE bit is set.

In Single Timer mode the output compare function is performed only on CNTR1. The difference between both the modes is that, in Single timer mode, CNTR1 can be compared with any of the four DCR registers, and in Dual timer mode, CNTR1 is compared with DCR0 or DCR1 and CNTR2 is compared with DCR2 or DCR3.

Note: 1 The output compare function is only available for DCRx values other than 0 (reset value).

2 Duty cycle registers are buffered internally. The CPU writes in Preload duty cycle registers and these values are transferred in Active duty cycle registers after an overflow event if the corresponding transfer bit (TRANx bit) is set. Output compare is done by comparing these active DCRx values with the counters.

Figure 44. Block diagram of output compare mode (single timer)

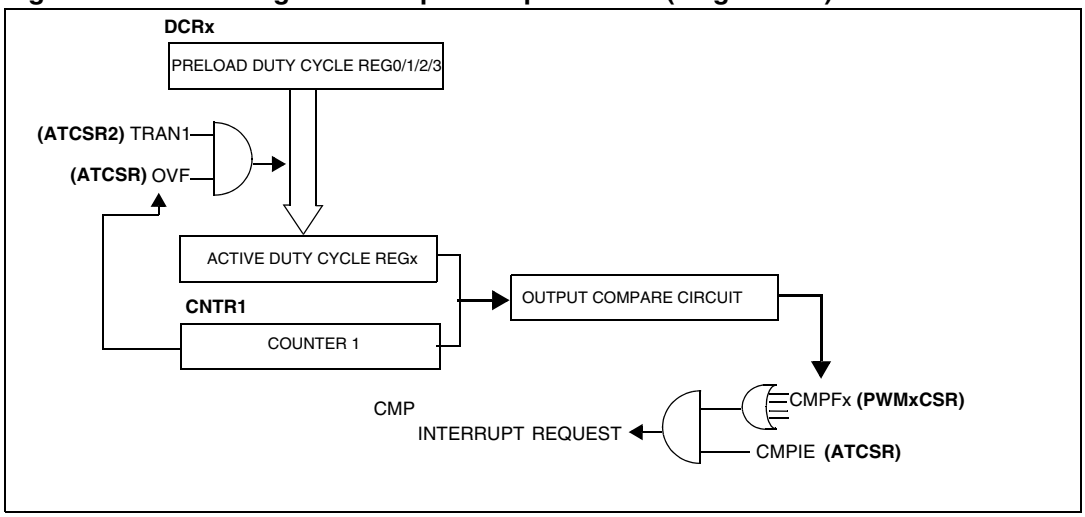

Input capture mode

The 12-bit ATICR register is used to latch the value of the 12-bit free running upcounter CNTR1 after a rising or falling edge is detected on the ATIC pin. When an Input Capture occurs, the ICF bit is set and the ATICR register contains the value of the free running upcounter. An IC interrupt is generated if the ICIE bit is set. The ICF bit is reset by reading the ATICRH/ATICRL register when the ICF bit is set. The ATICR is a read only register and always contains the free running upcounter value which corresponds to the most recent input capture. Any further input capture is inhibited while the ICF bit is set.

Figure 45. Block diagram of input capture mode

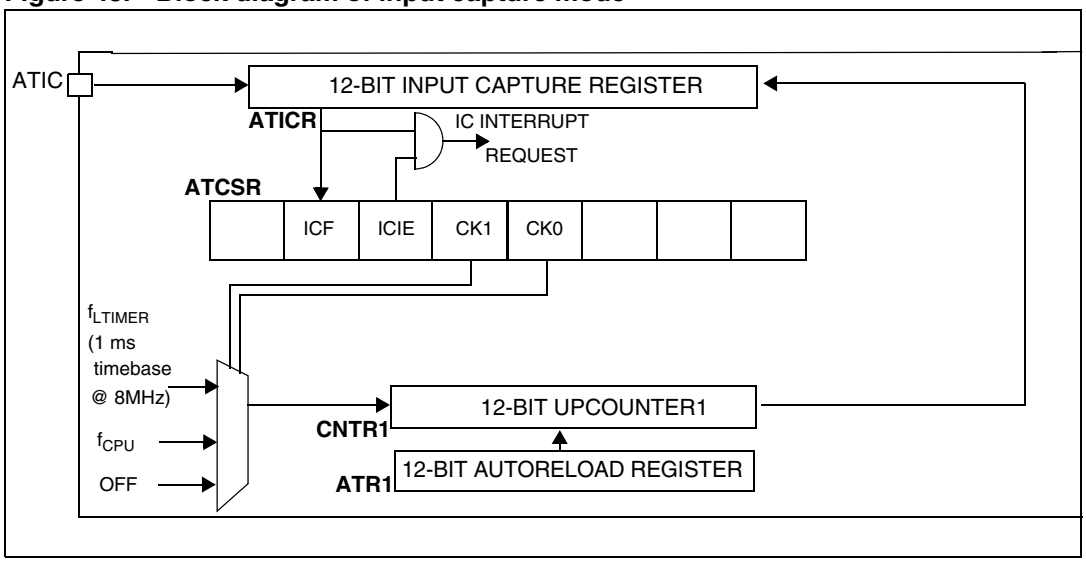

Figure 46. Input capture timing diagram

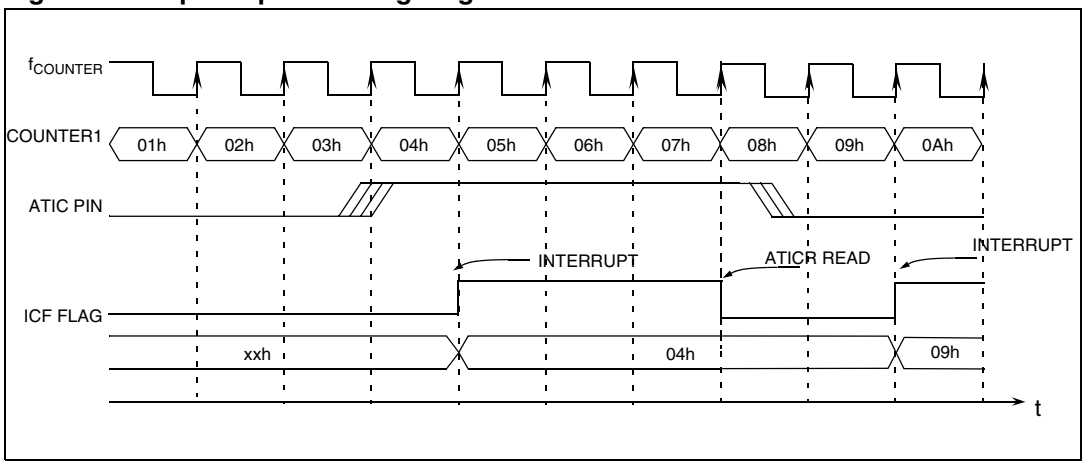

Long range input capture

Pulses that last more than 8 µs can be measured with an accuracy of 4 µs if f_{OSC} equals 8 MHz in the following conditions:

- The 12-bit AT4 timer is clocked by the Lite timer (RTC pulse: CK[1:0] = 01 in the ATCSR register)
- The ICS bit in the ATCSR2 register is set so that the LTIC pin is used to trigger the AT4 timer capture.
- The signal to be captured is connected to LTIC pin
- Input Capture registers LTICR, ATICRH and ATICRL are read

This configuration allows to cascade the Lite timer and the 12-bit AT4 timer to get a 20-bit input capture value. Refer to *Figure 47*.

Figure 47. Long range input capture block diagram

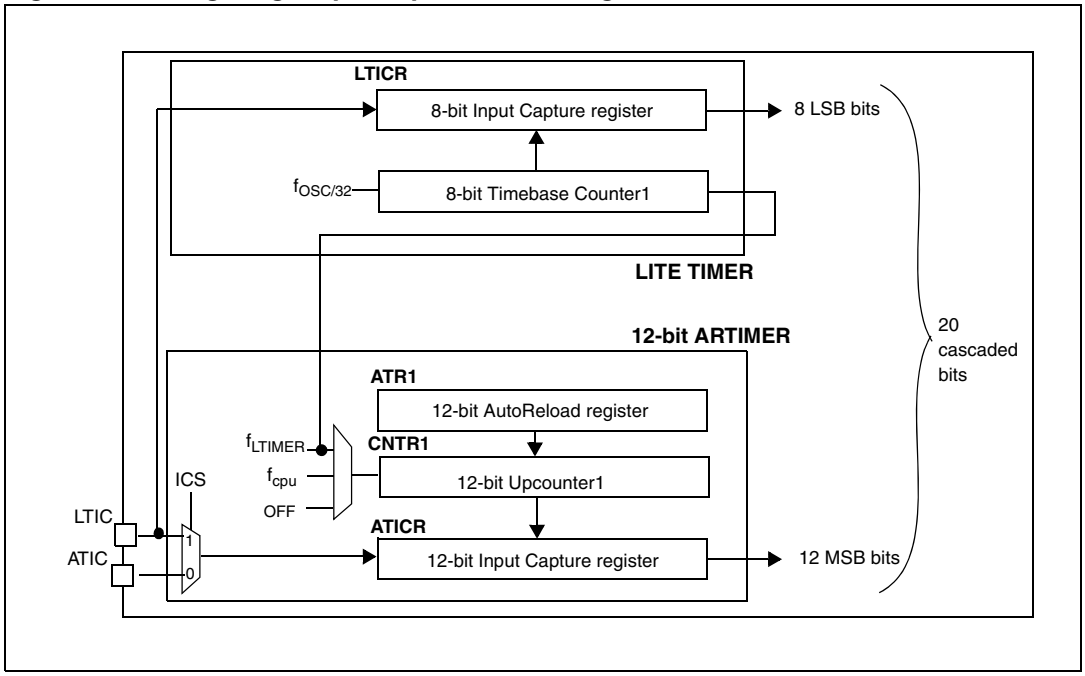

Since the input capture flags (ICF) for both timers (AT4 timer and LT timer) are set when signal transition occurs, software must mask one interrupt by clearing the corresponding ICIE bit before setting the ICS bit.

If the ICS bit changes (from 0 to 1 or from 1 to 0), a spurious transition might occur on the Input Capture signal because of different values on LTIC and ATIC. To avoid this situation, it is recommended to do as follows:

1. First, reset both ICIE bits.
2. Then set the ICS bit.
3. Reset both ICF bits.
4. And then set the ICIE bit of desired interrupt.

Computing a pulse length in long input capture mode is not straightforward since both timers are used. The following steps are required:

1. At the first input capture on the rising edge of the pulse, we assume that values in the registers are the following:
   - LTICR = LT1
   - ATICRH = ATH1
   - ATICRL = ATL1
   - Hence ATICR1 [11:0] = ATH1 & ATL1. Refer to *Figure 48 on page 88*.
2. At the second input capture on the falling edge of the pulse, we assume that the values in the registers are as follows:
   - LTICR = LT2
   - ATICRH = ATH2
   - ATICRL = ATL2
   - Hence ATICR2 [11:0] = ATH2 & ATL2.

Now pulse width P between first capture and second capture is given by:

$$P = \text{decimal} \times (F9 - LT1 + LT2 + 1) \times 0.004\text{ms} + \text{decimal}((FFF \times N) + N + ATICR2 - ATICR1 - 1) \times 1\text{ms}$$

where N is the number of overflows of 12-bit CNTR1.

Figure 48. Long range input capture timing diagram

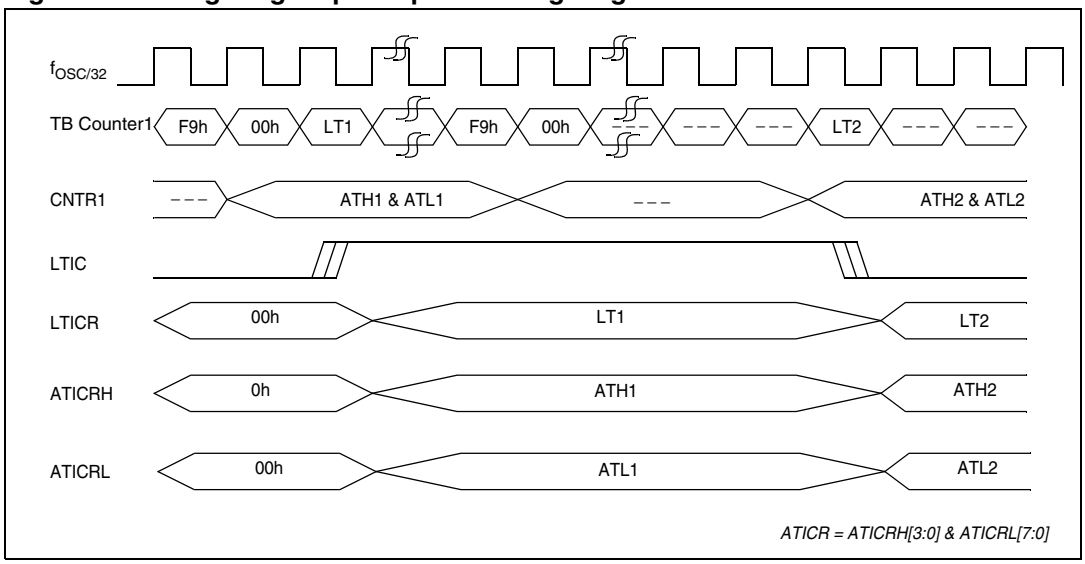

One-pulse mode

One-pulse mode can be used to control PWM2/3 signal with an external LTIC pin. This mode is available only in Dual Timer mode i.e. only for CNTR2, when the OP_EN bit in PWM3CSR register is set.

One-pulse mode is activated by the external LTIC input. The active edge of the LTIC pin is selected by the OPEDGE bit in the PWM3CSR register.

After getting the active edge of the LTIC pin, CNTR2 is reset (000h) and PWM3 is set to high. CNTR2 starts counting from 000h, when it reaches the active DCR3 value then PWM3 goes low. Till this time, any further transitions on the LTIC signal will have no effect. If there are LTIC transitions after CNTR2 reaches DCR3 value, CNTR2 is reset again and PWM3 goes high.

If there is no LTIC active edge, CNTR2 counts until it reaches the ATR2 value, then it is reset again and PWM3 is set to high. The counter again starts counting from 000h, when it reaches the active DCR3 value PWM3 goes low, the counter counts until it reaches ATR2, it resets and PWM3 is set to high and so on.

The same operation applies for PWM2, but in this case the comparison is done on DCR2. OP_EN and OPEDGE bits take effect on the fly and are not synchronized with Counter 2 overflow. The output bit OP2/3 can be used to inverse the polarity of PWM2/3 in one-pulse mode. The update of these bits (OP2/3) is synchronized with the counter 2 overflow, they will be updated if the TRAN2 bit is set.

The time taken from activation of LTIC input and CNTR2 reset is between 1 and 2 t_{CPU} cycles, that is, 125 ns to 250 ns (with 8-MHz f_{CPU}).

Lite timer Input Capture interrupt should be disabled while 12-bit ARtimer is in One-pulse mode. This is to avoid spurious interrupts.

The priority of the various conditions for PWM3 is the following: Break > one-pulse mode with active LTIC edge > Forced overflow by s/w > one-pulse mode without active LTIC edge > normal PWM operation.

It is possible to update DCR2/3 and OP2/3 at the counter 2 reset, the update is synchronized with the counter reset. This is managed by the overflow interrupt which is generated if counter is reset either due to ATR match or active pulse at LTIC pin. DCR2/3 and OP2/3 update in one-pulse mode is performed dynamically using a software force update. DCR3 update in this mode is not synchronized with any event. That may lead to a longer next PWM3 cycle duration than expected just after the change.

In One-pulse mode ATR2 value must be greater than DCR2/3 value for PWM2/3. (opposite to normal PWM mode).

If there is an active edge on the LTIC pin after the counter has reset due to an ATR2 match, then the timer again gets reset and appears as modified Duty cycle depending on whether the new DCR value is less than or more than the previous value.

The TRAN2 bit should be set along with the FORCE2 bit with the same instruction after a write to the DCR register.

ATR2 value should be changed after an overflow in one-pulse mode to avoid any irregular PWM cycle.

When exiting from one-pulse mode, the OP_EN bit in the PWM3CSR register should be reset first and then the ENCNTR2 bit (if counter 2 must be stopped).

How to enter One-pulse mode

The steps required to enter One-pulse mode are the following:

1. Load ATR2H/ATR2L with required value.
2. Load DCR3H/DCR3L for PWM3. ATR2 value must be greater than DCR3.
3. Set OP3 in PWM3CSR if polarity change is required.
4. Select CNTR2 by setting ENCNTR2 bit in ATCSR2.
5. Set TRAN2 bit in ATCSR2 to enable transfer.
6. "Wait for Overflow" by checking the OVF2 flag in ATCSR2.
7. Select counter clock using CK<1:0> bits in ATCSR.
8. Set OP_EN bit in PWM3CSR to enable one-pulse mode.
9. Enable PWM3 by OE3 bit of PWMCR.

The "Wait for Overflow" in step 6 can be replaced by a forced update.

Follow the same procedure for PWM2 with the bits corresponding to PWM2.

Note: When break is applied in One-pulse mode, CNTR2, DCR2/3 & ATR2 registers are reset. So, these registers have to be initialized again when break is removed.

Figure 49. Block diagram of One-pulse mode

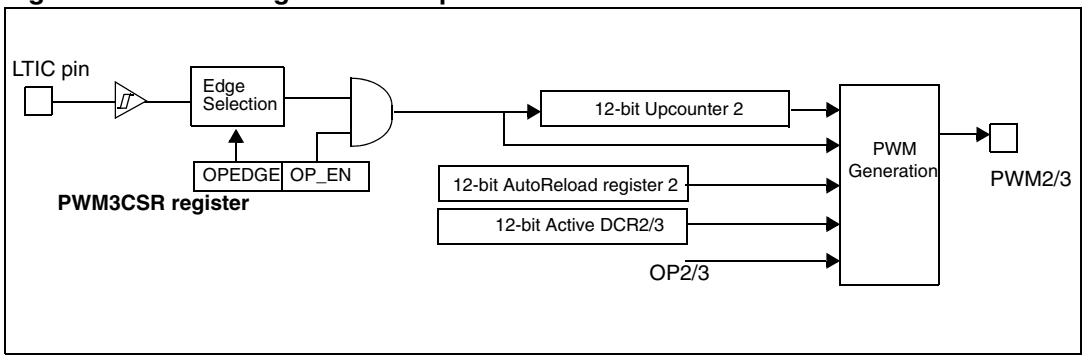

Figure 50. One-pulse mode and PWM timing diagram

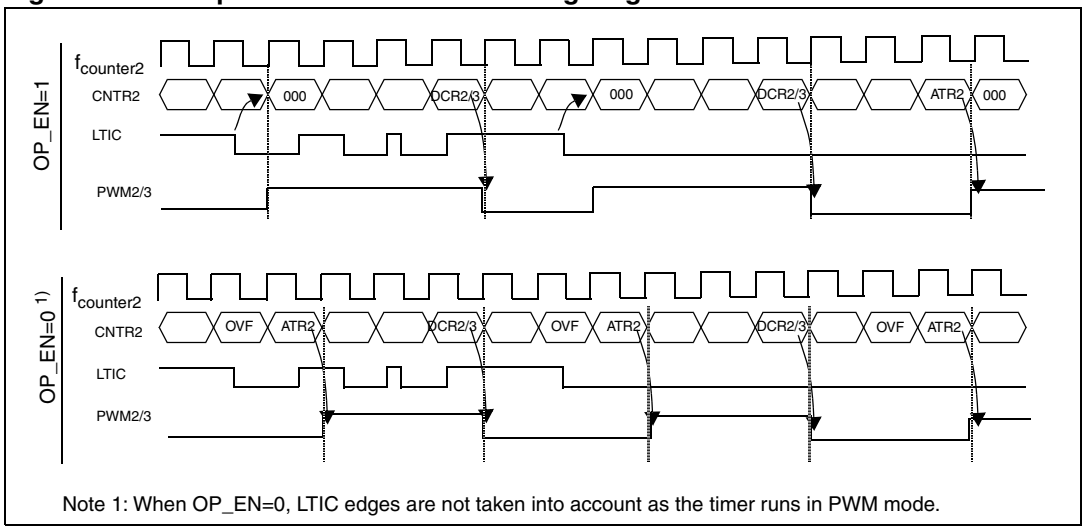

Note 1: When OP_EN=0, LTIC edges are not taken into account as the timer runs in PWM mode.

Figure 51. Dynamic DCR2/3 update in One-pulse mode

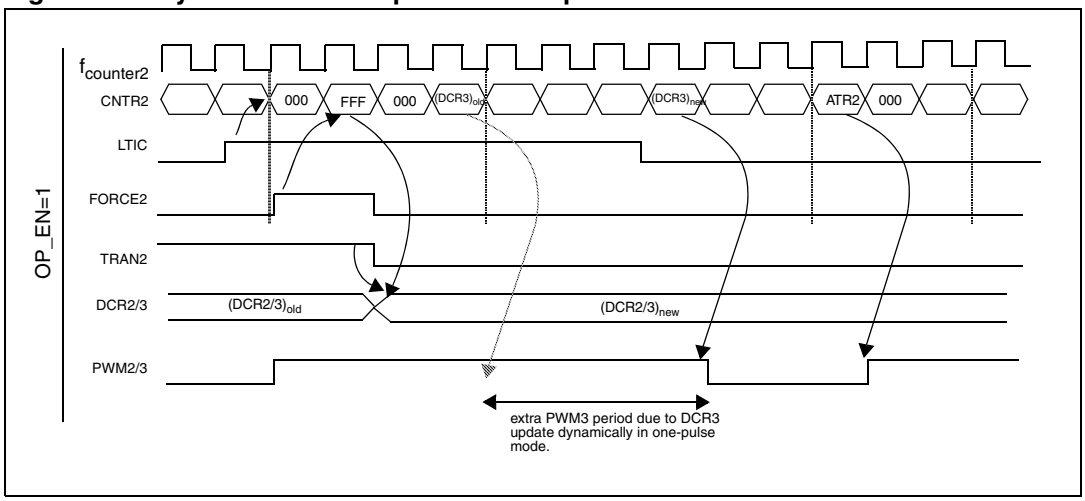

Force update

In order not to wait for the $counter_x$ overflow to load the value into active DCRx registers, a programmable $counter_x$ overflow is provided. For both counters, a separate bit is provided which when set, make the counters start with the overflow value, i.e. FFFh. After overflow, the counters start counting from their respective auto reload register values.

These bits are FORCE1 and FORCE2 in the ATCSR2 register. FORCE1 is used to force an overflow on Counter 1 and, FORCE2 is used for Counter 2. These bits are set by software and reset by hardware after the respective counter overflow event has occurred.

This feature can be used at any time. All related features such as PWM generation, output compare, input capture, One-pulse (refer to *Figure 51: Dynamic DCR2/3 update in One-pulse mode*) etc. can be used this way.

Figure 52. Force overflow timing diagram

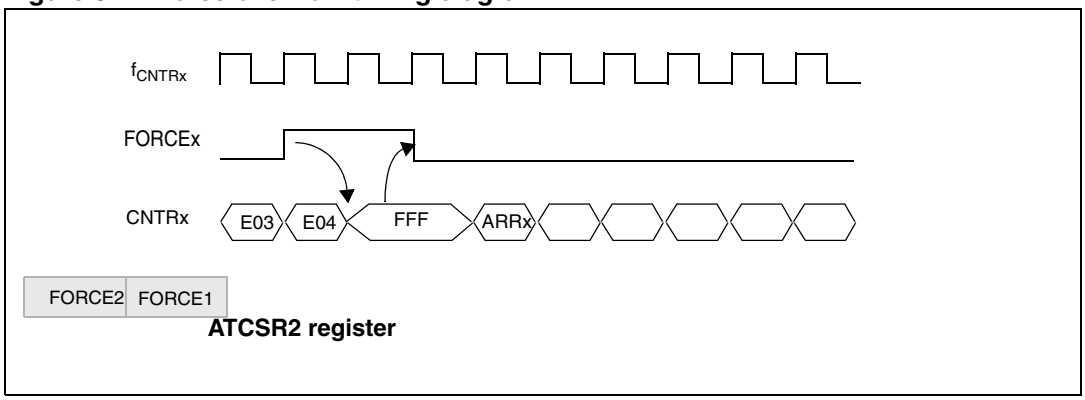

11.2.4 Low power modes

Table 35. Effect of low power modes on autoreload timer

Mode	Description
Wait	No effect on AT timer
Halt	AT timer halted.

11.2.5 Interrupts

Table 36. Description of interrupt events

Interrupt event	Event flag	Enable control bit	Exit from Wait	Exit from Halt	Exit from Active-halt
Overflow Event	OVF1	OVIE1	Yes	No	Yes
AT4 IC Event	ICF	ICIE	Yes	No	No
Overflow Event2	OVF2	OVIE2	Yes	No	No

Note: The AT4 IC is connected to an interrupt vector. The OVF event is mapped on a separate vector (see Interrupts chapter).
They generate an interrupt if the enable bit is set in the ATCSR register and the interrupt mask in the CC register is reset (RIM instruction).

11.2.6 Register description

Timer control status register (ATCSR)

Reset value: 0x00 0000 (x0h)

7							0
0	ICF	ICIE	CK1	CK0	OVF1	OVFIE1	CMPIE
Read / Write							

Bit 7 = Reserved

Bit 6 = **ICF** *Input capture flag*

This Bit is set by hardware and cleared by software by reading the ATICR register (a read access to ATICRH or ATICRL clears this flag). Writing to this bit does not change the bit value.

0: No input capture

1: An input capture has occurred

Bit 5 = **ICIE** *IC interrupt enable bit*

This bit is set and cleared by software.
0: Input capture interrupt disabled

1: Input capture interrupt enabled

Bits 4:3 = **CK[1:0]** *Counter clock selection bits*

These bits are set and cleared by software and cleared by hardware after a reset. they select the clock frequency of the counter.

Table 37. Counter clock selection

Counter clock selection	CK1	CK0
OFF	0	0
selection forbidden	1	1
f_{LTIMER} (1 ms timebase @ 8 MHz)	0	1
f_{CPU}	1	0

Bit 2 = **OVF1** *Overflow flag*

This bit is set by hardware and cleared by software by reading the ATCSR register. It indicates the transition of the counter1 CNTR1 from FFFh to ATR1 value.

0: No counter overflow occurred

1: Counter overflow occurred

Bit 1 = **OVFIE1** *Overflow interrupt enable bit*

This bit is read/write by software and cleared by hardware after a reset.

0: Overflow Interrupt Disabled.

1: Overflow Interrupt Enabled.

Bit 0 = **CMPIE** *Compare interrupt enable bit*

This bit is read/write by software and cleared by hardware after a reset. it can be used to mask the interrupt generated when any of the cmpfx bit is set.

0: Output compare interrupt disabled.

1: Output compare interrupt enabled.

Counter register 1 high (CNTR1H)

Reset value: 0000 0000 (00h)

15							8
0	0	0	0	CNTR1_ 11	CNTR1_ 10	CNTR1_9	CNTR1_8
Read only							

Counter register 1 low (CNTR1L)

Reset value: 0000 0000 (00h)

7							0
CNTR1_7	CNTR1_6	CNTR1_5	CNTR1_4	CNTR1_3	CNTR1_2	CNTR1_1	CNTR1_0
Read only							

Bits 15:12 = Reserved

Bits 11:0 = **CNTR1[11:0]** *Counter value*

This 12-bit register is read by software and cleared by hardware after a reset. The counter CNTR1 increments continuously as soon as a counter clock is selected. To obtain the 12-bit value, software should read the counter value in two consecutive read operations. As there is no latch, it is recommended to read LSB first. In this case, CNTR1H can be incremented between the two read operations and to have an accurate result when $f_{timer}=f_{CPU}$, special care must be taken when CNTR1L values close to FFh are read.

When a counter overflow occurs, the counter restarts from the value specified in the ATR1 register.

Autoreload register (ATR1H)

Reset value: 0000 0000 (00h)

15							8
0	0	0	0	ATR11	ATR10	ATR9	ATR8
Read/write							

Autoreload register (ATR1L)

Reset value: 0000 0000 (00h)

7							0
ATR7	ATR6	ATR5	ATR4	ATR3	ATR2	ATR1	ATR0
Read/write							

Bits 11:0 = **ATR1[11:0]** *Autoreload register 1:*
This is a 12-bit register which is written by software. The ATR1 register value is automatically loaded into the upcounter CNTR1 when an overflow occurs. The register value is used to set the PWM frequency.

PWM output control register (PWMCR)

Reset value: 0000 0000 (00h)

7							0
0	OE3	0	OE2	0	OE1	0	OE0
Read/write							

Bits 7:0 = **OE[3:0]** *PWMx output enable* bits

These bits are set and cleared by software and cleared by hardware after a reset.

0: PWM mode disabled. PWMx output alternate function disabled (I/O pin free for general purpose I/O)

1: PWM mode enabled

PWMX control status register (PWMxCSR)

Reset value: 0000 0000 (00h)

7							0
0	0	0	0	OP_EN	OPEDGE	OPx	CMPFx
Read/write							

Bits 7:4= Reserved, must be kept cleared.

Bit 3 = OP_EN *One-pulse mode enable bit*

This bit is read/write by software and cleared by hardware after a reset. This bit enables the One-pulse feature for PWM2 and PWM3 **(only available for PWM3CSR)**

0: One-pulse mode disable for PWM2/3.

1: One-pulse mode enable for PWM2/3.

Bit 2 = OPEDGE *One-pulse edge selection bit*

This bit is read/write by software and cleared by hardware after a reset. This bit selects the polarity of the LTIC signal for One-pulse feature. This bit will be effective only if OP_EN bit is set **(only available for PWM3CSR)**

0: Falling edge of LTIC is selected.

1: Rising edge of LTIC is selected.

Bit 1 = **OPx** *PWMx output polarity bit*

This bit is read/write by software and cleared by hardware after a reset. This bit selects the polarity of the PWM signal.

0: The PWM signal is not inverted.

1: The PWM signal is inverted.

Bit 0 = **CMPFx** PWMx *compare flag*

This bit is set by hardware and cleared by software by reading the PWMxCSR register. It indicates that the upcounter value matches the Active DCRx register value.

0: Upcounter value does not match DCRx value.

1: Upcounter value matches DCRx value.

Break control register (BREAKCR)

Reset value: 0000 0000 (00h)

7							0
0	BREDGE	BA	BPEN	PWM3	PWM2	PWM1	PWM0
Read/write							

Bit 7 = Reserved

Bit 6 = **BREDGE** *Break input edge selection bit*

This bit is read/write by software and cleared by hardware after reset. It selects the active level of Break signal.

0: Low level of Break selected as active level

1: High level of Break selected as active level

Bit 5 = **BA** *Break active bit*

This bit is read/write by software, cleared by hardware after reset and set by hardware when the active level defined by the BR1EDGE bit is applied on the BREAK pin. It activates/deactivates the Break function.

0: Break not active

1: Break active

Bit 4 = **BPEN** *Break pin enable bit*

This bit is read/write by software and cleared by hardware after reset.

0: Break pin disabled

1: Break pin enabled

Bits 3:0 = **PWM[3:0]** *Break pattern bits*

These bits are read/write by software and cleared by hardware after a reset. They are used to force the four PWMx output signals into a stable state when the Break function is active and corresponding OEx bit is set.

PWMx duty cycle register High (DCRxH)

Reset value: 0000 0000 (00h)

15							8
0	0	0	0	DCR11	DCR10	DCR9	DCR8
Read/write							

Bits 15:12 = Reserved.

PWMx duty cycle register Low (DCRxL)

Reset value: 0000 0000 (00h)

7							0
DCR7	DCR6	DCR5	DCR4	DCR3	DCR2	DCR1	DCR0
Read/write							

Bits 11:0 = **DCRx[11:0]** *PWMx duty cycle value:* this 12-bit value is written by software. It defines the duty cycle of the corresponding PWM output signal (see *Figure 40*).

In PWM mode (OEx=1 in the PWMCR register) the DCR[11:0] bits define the duty cycle of the PWMx output signal (see *Figure 40*). In output compare mode, they define the value to be compared with the 12-bit upcounter value.

Input capture register high (ATICRH)

Reset value: 0000 0000 (00h)

15							8
0	0	0	0	ICR11	ICR10	ICR9	ICR8
Read only							

Bits 15:12 = Reserved.

Input capture register low (ATICRL)

Reset value: 0000 0000 (00h)

7							0
ICR7	ICR6	ICR5	ICR4	ICR3	ICR2	ICR1	ICR0
Read only							

Bits 11:0 = **ICR[11:0]** *Input capture data*.

This is a 12-bit register which is readable by software and cleared by hardware after a reset. The ATICR register contains captured the value of the 12-bit CNTR1 register when a rising or falling edge occurs on the ATIC or LTIC pin (depending on ICS). Capture will only be performed when the ICF flag is cleared.

Break enable register (BREAKEN)

Reset value: 0000 0011 (03h)

7							0
0	0	0	0	0	0	BREN2	BREN1
Read/write							

Bits 7:2 = Reserved, must be kept cleared.

Bit 1 = **BREN2** *Break enable for counter 2 bit*

This bit is read/write by software. It enables the break functionality for Counter2 if BA bit is set in BREAKCR. It controls PWM2/3 if ENCNTR2 bit is set.

0: No Break applied for CNTR2

1: Break applied for CNTR2

Bit 0 = **BREN1** *Break enable for counter 1 bit*

This bit is read/write by software. It enables the break functionality for Counter1. If BA bit is set, it controls PWM0/1 by default, and controls PWM2/3 also if ENCNTR2 bit is reset.

0: No Break applied for CNTR1

1: Break applied for CNTR1

Timer control register 2 (ATCSR2)

Reset value: 0000 0011 (03h)

7							0
FORCE2	FORCE1	ICS	OVFIE2	OVF2	ENCNTR2	TRAN2	TRAN1
Read/write							

Bit 7 = **FORCE2** *Force counter 2 overflow bit*

This bit is read/set by software. When set, it loads FFFh in the CNTR2 register. It is reset by hardware one CPU clock cycle after counter 2 overflow has occurred.

0 : No effect on CNTR2

1 : Loads FFFh in CNTR2

Note: This bit must not be reset by software

Bit 6 = **FORCE1** *Force counter 1 overflow bit*

This bit is read/set by software. When set, it loads FFFh in CNTR1 register. It is reset by hardware one CPU clock cycle after counter 1 overflow has occurred.

0 : No effect on CNTR1

1 : Loads FFFh in CNTR1

Note: This bit must not be reset by software

Bit 5 = **ICS** *Input capture shorted bit*

This bit is read/write by software. It allows the ATtimer CNTR1 to use the LTIC pin for long Input Capture.

0 : ATIC for CNTR1 input capture

1 : LTIC for CNTR1 input capture

Bit 4 = **OVFIE2** *Overflow interrupt 2 enable bit*

This bit is read/write by software and controls the overflow interrupt of counter2.

0: Overflow interrupt disabled.

1: Overflow interrupt enabled.

Bit 3 = **OVF2** *Overflow flag*

This bit is set by hardware and cleared by software by reading the ATCSR2 register. It indicates the transition of the counter2 from FFFh to ATR2 value.

0: No counter overflow occurred

1: Counter overflow occurred

Bit 2 = **ENCNTR2** *Enable counter2* for PWM2/3

This bit is read/write by software and switches the PWM2/3 operation to the CNTR2 counter. If this bit is set, PWM2/3 will be generated using CNTR2.

0: PWM2/3 is generated using CNTR1.

1: PWM2/3 is generated using CNTR2.

Note: Counter 2 gets frozen when the ENCNTR2 bit is reset. When ENCNTR2 is set again, the counter will restart from the last value.

Bit 1= **TRAN2** *Transfer enable2 bit*

This bit is read/write by software, cleared by hardware after each completed transfer and set by hardware after reset. It controls the transfers on CNTR2.

It allows the value of the Preload DCRx registers to be transferred to the Active DCRx registers after the next overflow event.

The OPx bits are transferred to the shadow OPx bits in the same way.

Note: 1 DCR2/3 transfer will be controlled using this bit if ENCNTR2 bit is set.

2 This bit must not be reset by software

Bit 0 = **TRAN1** *Transfer enable 1 bit*

This bit is read/write by software, cleared by hardware after each completed transfer and set by hardware after reset. It controls the transfers on CNTR1. It allows the value of the Preload DCRx registers to be transferred to the Active DCRx registers after the next overflow event.

The OPx bits are transferred to the shadow OPx bits in the same way.

Note: 1 DCR0,1 transfers are always controlled using this bit.

2 DCR2/3 transfer will be controlled using this bit if ENCNTR2 is reset.

3 This bit must not be reset by software

Autoreload register 2 (ATR2H)

Reset value: 0000 0000 (00h)

15							8
0	0	0	0	ATR11	ATR10	ATR9	ATR8
Read/write							

Autoreload register (ATR2L)

Reset value: 0000 0000 (00h)

7							0
ATR7	ATR6	ATR5	ATR4	ATR3	ATR2	ATR1	ATR0
Read/write							

Bits 11:0 = **ATR2[11:0]** *Autoreload register 2*

This is a 12-bit register which is written by software. The ATR2 register value is automatically loaded into the upcounter CNTR2 when an overflow of CNTR2 occurs. The register value is used to set the PWM2/PWM3 frequency when ENCNTR2 is set.

Dead time generator register (DTGR)

Reset value: 0000 0000 (00h)

7							0
DTE	DT6	DT5	DT4	DT3	DT2	DT1	DT0
Read/write							

Bit 7 = **DTE** *Dead time enable bit*

This bit is read/write by software. It enables a dead time generation on PWM0/PWM1.

0: No Dead time insertion.

1: Dead time insertion enabled.

Bits 6:0 = **DT[6:0]** *Dead time value*

These bits are read/write by software. They define the dead time inserted between PWM0/PWM1. Dead time is calculated as follows:

Dead Time = DT[6:0] x Tcounter1

Note: If DTE is set and DT[6:0]=0, PWM output signals will be at their reset state.

Table 38. Register mapping and reset values

Add. (Hex)	Register label	7	6	5	4	3	2	1	0
0011	**ATCSR** Reset value	0	ICF 0	ICIE 0	CK1 0	CK0 0	OVF1 0	OVFIE1 0	CMPIE 0
0012	**CNTR1H** Reset value	0	0	0	0	CNTR1_11 0	CNTR1_10 0	CNTR1_9 0	CNTR1_8 0
0013	**CNTR1L** Reset value	CNTR1_7 0	CNTR1_8 0	CNTR1_7 0	CNTR1_6 0	CNTR1_3 0	CNTR1_2 0	CNTR1_1 0	CNTR1_0 0
0014	**ATR1H** Reset value	0	0	0	0	ATR11 0	ATR10 0	ATR9 0	ATR8 0
0015	**ATR1L** Reset value	ATR7 0	ATR6 0	ATR5 0	ATR4 0	ATR3 0	ATR2 0	ATR1 0	ATR0 0
0016	**PWMCR** Reset value	0	OE3 0	0	OE2 0	0	OE1 0	0	OE0 0
0017	**PWM0CSR** Reset value	0	0	0	0	0	0	OP0 0	CMPF0 0
0018	**PWM1CSR** Reset value	0	0	0	0	0	0	OP1 0	CMPF1 0
0019	**PWM2CSR** Reset value	0	0	0	0	0	0	OP2 0	CMPF2 0
001A	**PWM3CSR** Reset value	0	0	0	0	OP_EN 0	OPEDGE 0	OP3 0	CMPF3 0
001B	**DCR0H** Reset value	0	0	0	0	DCR11 0	DCR10 0	DCR9 0	DCR8 0

Table 38. Register mapping and reset values (continued)

Add. (Hex)	Register label	7	6	5	4	3	2	1	0
001C	**DCR0L** Reset value	DCR7 0	DCR6 0	DCR5 0	DCR4 0	DCR3 0	DCR2 0	DCR1 0	DCR0 0
001D	**DCR1H** Reset value	0	0	0	0	DCR11 0	DCR10 0	DCR9 0	DCR8 0
001E	**DCR1L** Reset value	DCR7 0	DCR6 0	DCR5 0	DCR4 0	DCR3 0	DCR2 0	DCR1 0	DCR0 0
001F	**DCR2H** Reset value	0	0	0	0	DCR11 0	DCR10 0	DCR9 0	DCR8 0
0020	**DCR2L** Reset value	DCR7 0	DCR6 0	DCR5 0	DCR4 0	DCR3 0	DCR2 0	DCR1 0	DCR0 0
0021	**DCR3H** Reset value	0	0	0	0	DCR11 0	DCR10 0	DCR9 0	DCR8 0
0022	**DCR3L** Reset value	DCR7 0	DCR6 0	DCR5 0	DCR4 0	DCR3 0	DCR2 0	DCR1 0	DCR0 0
0023	**ATICRH** Reset value	0	0	0	0	ICR11 0	ICR10 0	ICR9 0	ICR8 0
0024	**ATICRL** Reset value	ICR7 0	ICR6 0	ICR5 0	ICR4 0	ICR3 0	ICR2 0	ICR1 0	ICR0 0
0025	**ATCSR2** Reset value	FORCE2 0	FORCE1 0	ICS 0	OVFIE2 0	OVF2 0	ENCNTR2 0	TRAN2 1	TRAN1 1
0026	**BREAKCR** Reset value	0	BREDGE 0	BA 0	BPEN 0	PWM3 0	PWM2 0	PWM1 0	PWM0 0
0027	**ATR2H** Reset value	0	0	0	0	ATR11 0	ATR10 0	ATR9 0	ATR8 0
0028	**ATR2L** Reset value	ATR7 0	ATR6 0	ATR5 0	ATR4 0	ATR3 0	ATR2 0	ATR1 0	ATR0 0
0029	**DTGR** Reset value	DTE 0	DT6 0	DT5 0	DT4 0	DT3 0	DT2 0	DT1 0	DT0 0
002A	**BREAKEN** Reset value	0	0	0	0	0	0	BREN2 1	BREN1 1

11.3 Lite timer 2 (LT2)

11.3.1 Introduction

The Lite timer can be used for general-purpose timing functions. It is based on two free-running 8-bit upcounters and an 8-bit input capture register.

11.3.2 Main features

- Real-time clock
  - One 8-bit upcounter 1 ms or 2 ms timebase period (@ 8 MHz f_{OSC})
  - One 8-bit upcounter with autoreload and programmable timebase period from 4 µs to 1.024 ms in 4 µs increments (@ 8 MHz f_{OSC})
  - 2 maskable timebase interrupts
- Input capture
  - 8-bit input capture register (LTICR)
- Maskable interrupt with wakeup from Halt mode capability

Figure 53. Lite timer 2 block diagram

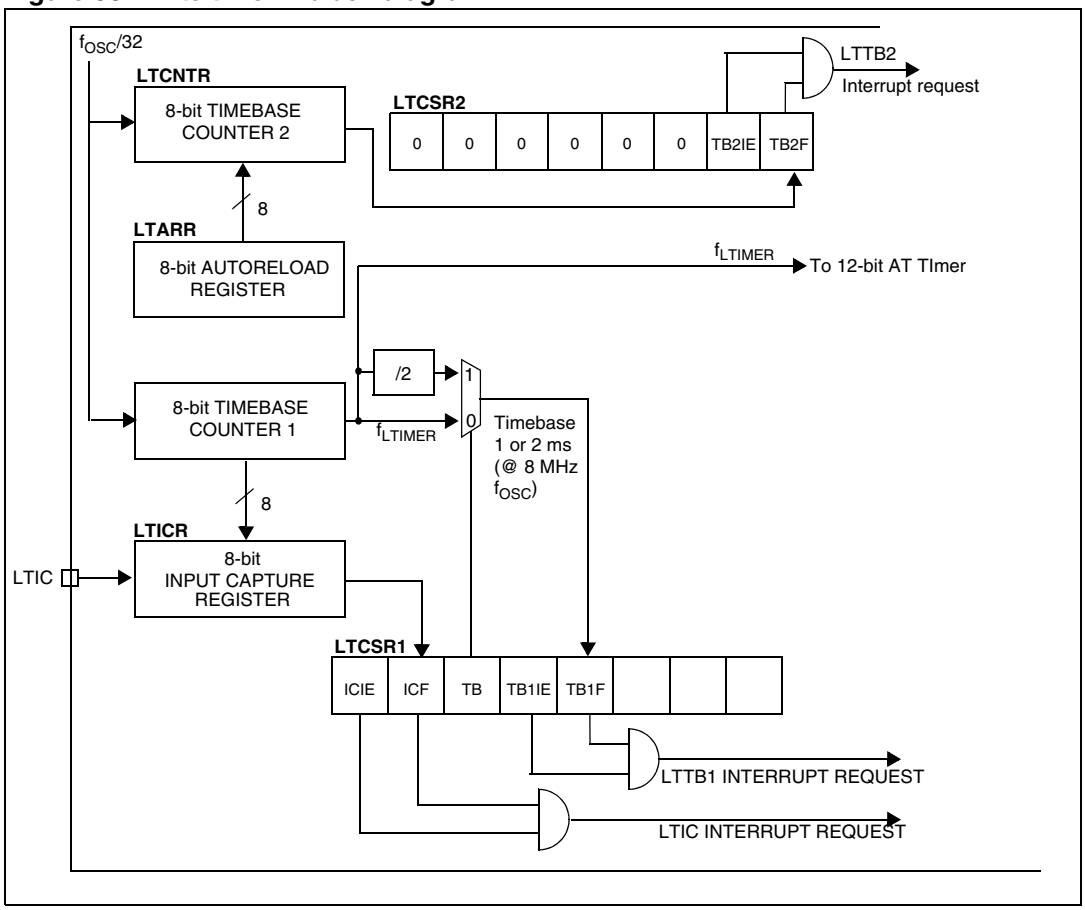

11.3.3 Functional description

Timebase counter 1

The 8-bit value of counter 1 cannot be read or written by software. After an MCU reset, it starts incrementing from 0 at a frequency of $f_{OSC}/32$. An overflow event occurs when the counter rolls over from F9h to 00h. If f_{OSC} = 8 MHz, then the time period between two counter overflow events is 1 ms. This period can be doubled by setting the TB bit in the LTCSR1 register.

When Counter 1 overflows, the TB1F bit is set by hardware and an interrupt request is generated if the TB1IE bit is set. The TB1F bit is cleared by software reading the LTCSR1 register.

Input capture

The 8-bit Input Capture register is used to latch the free-running upcounter (Counter 1) 1 after a rising or falling edge is detected on the LTIC pin. When an Input Capture occurs, the ICF bit is set and the LTICR register contains the counter 1 value. An interrupt is generated if the ICIE bit is set. The ICF bit is cleared by reading the LTICR register.

The LTICR is a read-only register and always contains the data from the last Input Capture. Input Capture is inhibited if the ICF bit is set.

Timebase counter 2

Counter 2 is an 8-bit autoreload upcounter. It can be read by accessing the LTCNTR register. After an MCU reset, it increments at a frequency of $f_{OSC}/32$ starting from the value stored in the LTARR register. A counter overflow event occurs when the counter rolls over from FFh to the LTARR reload value. Software can write a new value at any time in the LTARR register, this value will be automatically loaded in the counter when the next overflow occurs.

When Counter 2 overflows, the TB2F bit in the LTCSR2 register is set by hardware and an interrupt request is generated if the TB2IE bit is set. The TB2F bit is cleared by software reading the LTCSR2 register.

Figure 54. Input capture timing diagram

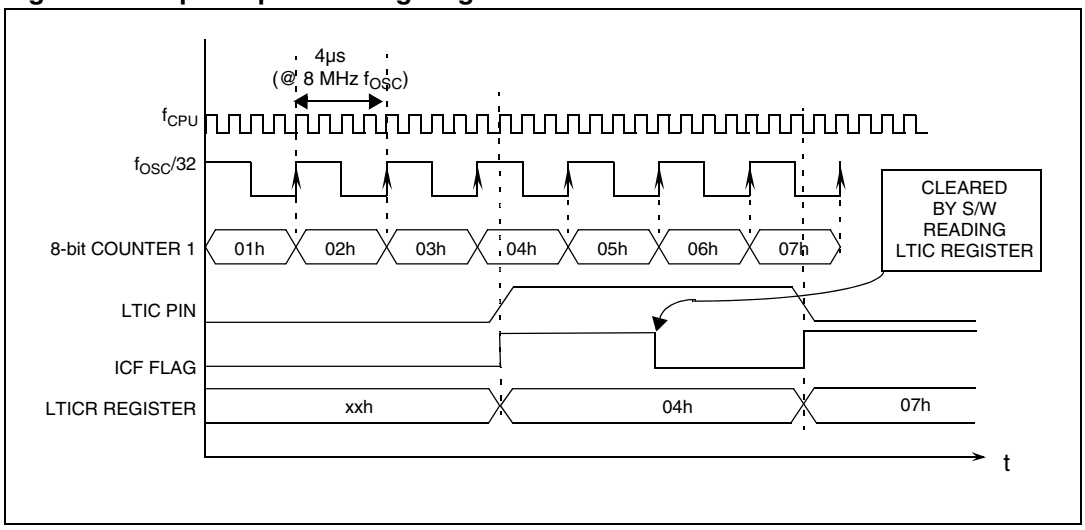

11.3.4 Low power modes

Table 39. Effect of low power modes on Lite timer 2

Mode	Description
Slow	No effect on Lite timer (this peripheral is driven directly by $f_{OSC}/32$)
Wait	No effect on Lite timer
Active-halt	No effect on Lite timer
Halt	Lite timer stops counting

11.3.5 Interrupts

Table 40. Description of interrupt events

Interrupt event	Event flag	Enable control Bit	Exit from Wait	Exit from Active-halt	Exit from Halt
Timebase 1 Event	TB1F	TB1IE	Yes	Yes	No
Timebase 2 Event	TB2F	TB2IE		No	
IC Event	ICF	ICIE		No	

The TBxF and ICF interrupt events are connected to separate interrupt vectors (see *Section 8: Interrupts*).

They generate an interrupt if the enable bit is set in the LTCSR1 or LTCSR2 register and the interrupt mask in the CC register is reset (RIM instruction).

11.3.6 Register description

Lite timer control/status register 2 (LTCSR2)

Reset value: 0000 0000 (00h)

7							0
0	0	0	0	0	0	TB2IE	TB2F
Read / Write							

Bits 7:2 = Reserved, must be kept cleared.

Bit 1 = **TB2IE** *Timebase 2 Interrupt enable bit*

This bit is set and cleared by software.

0: Timebase (TB2) interrupt disabled

1: Timebase (TB2) interrupt enabled

Bit 0 = **TB2F** *Timebase 2 Interrupt flag*

This bit is set by hardware and cleared by software reading the LTCSR register. Writing to this bit has no effect.

0: No Counter 2 overflow

1: A Counter 2 overflow has occurred

Lite timer autoreload register (LTARR)

Reset value: 0000 0000 (00h)

7							0
AR7	AR6	AR5	AR4	AR3	AR2	AR1	AR0
Read / Write							

Bits 7:0 = **AR[7:0]** *Counter 2 reload value*

These bits register is read/write by software. The LTARR value is automatically loaded into Counter 2 (LTCNTR) when an overflow occurs.

Lite timer counter 2 (LTCNTR)

Reset value: 0000 0000 (00h)

7							0
CNT7	CNT6	CNT5	CNT4	CNT3	CNT2	CNT1	CNT0
Read only							

Bits 7:0 = **CNT[7:0]** *Counter 2 Reload value*

This register is read by software. The LTARR value is automatically loaded into Counter 2 (LTCNTR) when an overflow occurs.

Lite timer control/status register (LTCSR1)

Reset value: 0x00 0000 (x0h)

7							0
ICIE	ICF	TB	TB1IE	TB1F			
Read / Write							

Bit 7 = **ICIE** *Interrupt enable bit*

This bit is set and cleared by software.

0: Input Capture (IC) interrupt disabled

1: Input Capture (IC) interrupt enabled

Bit 6 = **ICF** *Input capture flag*

This bit is set by hardware and cleared by software by reading the LTICR register. Writing to this bit does not change the bit value.

0: No Input Capture

1: An Input Capture has occurred

Note: After an MCU reset, software must initialize the ICF bit by reading the LTICR register

Bit 5 = **TB** *Timebase period selection bit*

This bit is set and cleared by software.

0: Timebase period = t_{OSC} * 8000 (1 ms @ 8 MHz)

1: Timebase period = t_{OSC} * 16000 (2 ms @ 8 MHz)

Bit 4 = **TB1IE** *Timebase Interrupt enable bit*

This bit is set and cleared by software.

0: Timebase (TB1) interrupt disabled

1: Timebase (TB1) interrupt enabled

Bit 3 = **TB1F** *Timebase Interrupt flag*

This bit is set by hardware and cleared by software reading the LTCSR register. Writing to this bit has no effect.

0: No counter overflow

1: A counter overflow has occurred

Bits 2:0 = Reserved, must be kept cleared.

Lite timer input capture register (LTICR)

Reset value: 0000 0000 (00h)

7							0
ICR7	ICR6	ICR5	ICR4	ICR3	ICR2	ICR1	ICR0
Read only							

Bits 7:0 = **ICR[7:0]** *Input capture value*

These bits are read by software and cleared by hardware after a reset. If the ICF bit in the LTCSR is cleared, the value of the 8-bit up-counter will be captured when a rising or falling edge occurs on the LTIC pin.

Table 41. Lite timer register mapping and reset values

Address (Hex.)	Register label	7	6	5	4	3	2	1	0
0C	**LTCSR2** Reset value	0	0	0	0	0	0	TB2IE 0	TB2F 0
0D	**LTARR** Reset value	AR7 0	AR6 0	AR5 0	AR4 0	AR3 0	AR2 0	AR1 0	AR0 0
0E	**LTCNTR** Reset value	CNT7 0	CNT6 0	CNT5 0	CNT4 0	CNT3 0	CNT2 0	CNT1 0	CNT0 0

Table 41. Lite timer register mapping and reset values (continued)

Address (Hex.)	Register label	7	6	5	4	3	2	1	0
0F	**LTCSR1** Reset value	ICIE 0	ICF x	TB 0	TB1IE 0	TB1F 0	0	0	0
10	**LTICR** Reset value	ICR7 0	ICR6 0	ICR5 0	ICR4 0	ICR3 0	ICR2 0	ICR1 0	ICR0 0

11.4 I²C bus interface (I²C)

11.4.1 Introduction

The I²C Bus Interface serves as an interface between the microcontroller and the serial I²C bus. It provides both multimaster and slave functions, and controls all I²C bus-specific sequencing, protocol, arbitration and timing. It supports fast I²C mode (400 kHz).

11.4.2 Main features

- Parallel-bus/I²C protocol converter
- Multi-master capability
- 7-bit/10-bit addressing
- Transmitter/receiver flag
- End-of-byte transmission flag
- Transfer problem detection

I²C master features:

- Clock generation
- I²C bus busy flag
- Arbitration lost flag
- End of byte transmission flag
- Transmitter/receiver Flag
- Start bit detection flag
- Start and stop generation

I²C slave features:

- Stop bit detection
- I²C bus busy flag
- Detection of misplaced start or stop condition
- Programmable I²C address detection
- Transfer problem detection
- End-of-byte transmission flag
- Transmitter/Receiver flag

11.4.3 General description

In addition to receiving and transmitting data, this interface converts it from serial to parallel format and vice versa, using either an interrupt or polled handshake. The interrupts are enabled or disabled by software. The interface is connected to the I²C bus by a data pin (SDAI) and by a clock pin (SCLI). It can be connected both with a standard I²C bus and a Fast I²C bus. This selection is made by software.

Mode selection

The interface can operate in the four following modes:

- Slave transmitter/receiver
- Master transmitter/receiver

By default, it operates in slave mode.

The interface automatically switches from slave to master after it generates a START condition and from master to slave in case of arbitration loss or a STOP generation, allowing then Multi-Master capability.

Communication flow

In Master mode, it initiates a data transfer and generates the clock signal. A serial data transfer always begins with a start condition and ends with a stop condition. Both start and stop conditions are generated in master mode by software.

In Slave mode, the interface is capable of recognizing its own address (7 or 10-bit), and the general call address. The general call address detection may be enabled or disabled by software.

Data and addresses are transferred as 8-bit bytes, MSB first. The first byte(s) following the start condition contain the address (one in 7-bit mode, two in 10-bit mode). The address is always transmitted in Master mode.

A 9th clock pulse follows the 8 clock cycles of a byte transfer, during which the receiver must send an acknowledge bit to the transmitter. Refer to *Figure 55*.

Figure 55. I²C bus protocol

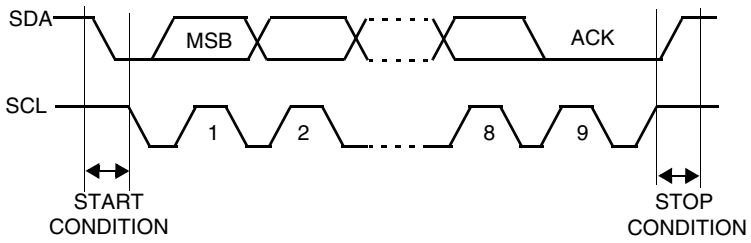

Acknowledge may be enabled and disabled by software.

The I²C interface address and/or general call address can be selected by software.

The speed of the I²C interface may be selected between Standard (up to 100 kHz) and Fast I²C (up to 400 kHz).

SDA/SCL line control

Transmitter mode: the interface holds the clock line low before transmission to wait for the microcontroller to write the byte in the data register.

Receiver mode: the interface holds the clock line low after reception to wait for the microcontroller to read the byte in the data register.

The SCL frequency (F_{scl}) is controlled by a programmable clock divider which depends on the I²C bus mode.

When the I^2C cell is enabled, the SDA and SCL ports must be configured as floating inputs. In this case, the value of the external pull-up resistor used depends on the application.

When the I^2C cell is disabled, the SDA and SCL ports revert to being standard I/O port pins.

Figure 56. I^2C interface block diagram

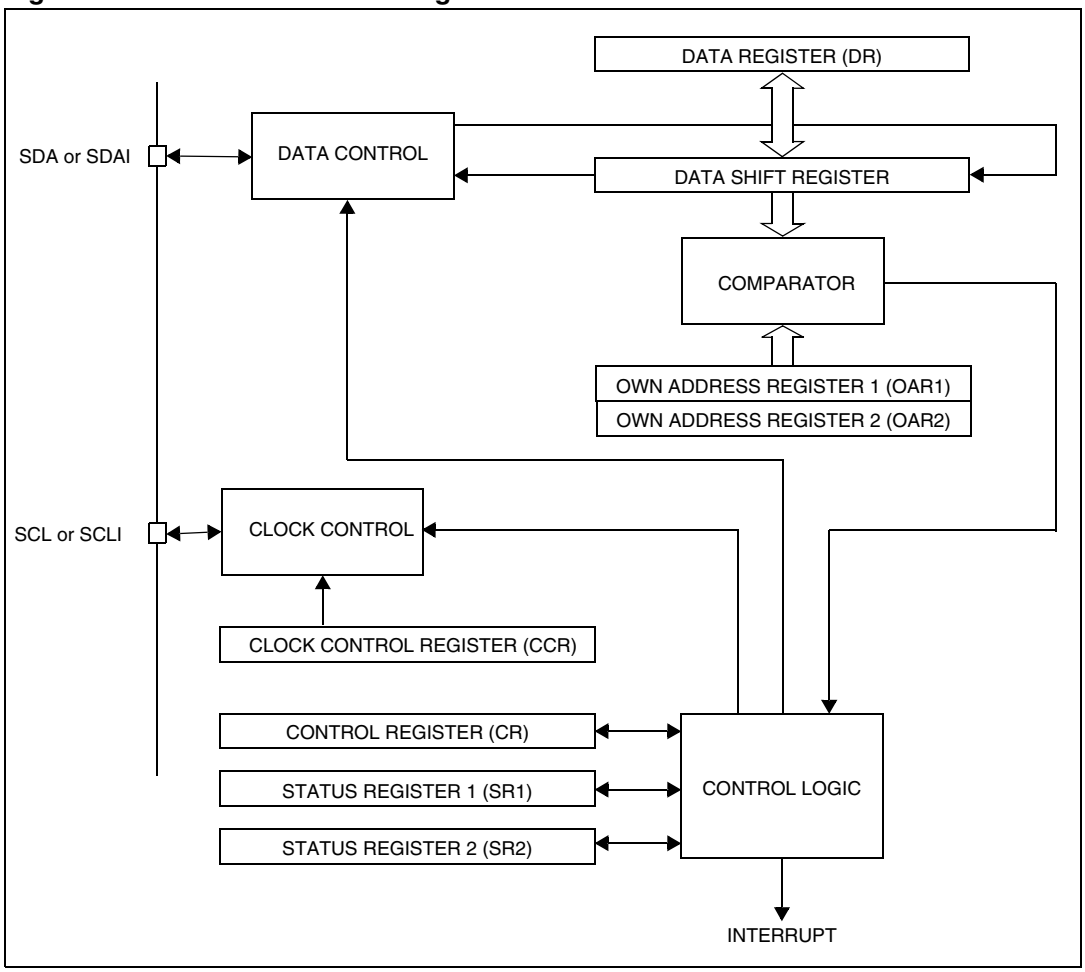

11.4.4 Functional description

Refer to the CR, SR1 and SR2 registers in *Section 11.4.7*. for the bit definitions.

By default the I^2C interface operates in Slave mode (M/SL bit is cleared) except when it initiates a transmit or receive sequence.

First the interface frequency must be configured using the FRi bits in the OAR2 register.

Slave mode

As soon as a start condition is detected, the address is received from the SDA line and sent to the shift register; then it is compared with the address of the interface or the general call address (if selected by software).

Note: In 10-bit addressing mode, the comparison includes the header sequence (11110xx0) and the two most significant bits of the address.

- **Header matched** (10-bit mode only): the interface generates an acknowledge pulse if the ACK bit is set.
- **Address not matched**: the interface ignores it and waits for another Start condition.
- **Address matched**: the interface generates in sequence:
  - Acknowledge pulse if the ACK bit is set.
  - EVF and ADSL bits are set with an interrupt if the ITE bit is set.

Then the interface waits for a read of the SR1 register, **holding the SCL line low** (see *Figure 57* transfer sequencing EV1).
Next, in 7-bit mode read the DR register to determine from the least significant bit (data direction bit) if the slave must enter Receiver or Transmitter mode.

In 10-bit mode, after receiving the address sequence the slave is always in receive mode. It will enter transmit mode on receiving a repeated Start condition followed by the header sequence with matching address bits and the least significant bit set (11110xx1).

Slave receiver

Following the address reception and after SR1 register has been read, the **slave receives bytes from the SDA line into the** DR register **via** the internal shift register. After each byte the interface generates in sequence:

- Acknowledge pulse if the ACK bit is set
- EVF and BTF bits are set with an interrupt if the ITE bit is set.

Then the interface waits for a read of the SR1 register followed by a read of the DR register, **holding the SCL line low** (see *Figure 57* Transfer sequencing EV2).

Slave transmitter

Following the address reception and after SR1 register has been read, **the slave sends bytes from** the DR register to **the SDA line** via the internal shift register.

The slave waits for a read of the SR1 register followed by a write in the DR register, **holding the SCL line low** (see *Figure 57* Transfer sequencing EV3).

When the acknowledge pulse is received the EVF and BTF bits are set by hardware with an interrupt if the ITE bit is set.

Closing slave communication

After the last data byte is transferred a stop condition is generated by the master. The interface detects this condition and sets:

EVF and STOPF bits with an interrupt if the ITE bit is set.

Then the interface waits for a read of the SR2 register (see *Figure 57* Transfer sequencing EV4).

Error cases

- **BERR**: Detection of a Stop or a Start condition during a byte transfer. In this case, the EVF and the BERR bits are set with an interrupt if the ITE bit is set.
  If it is a Stop then the interface discards the data, released the lines and waits for another Start condition.
  If it is a Start then the interface discards the data and waits for the next slave address on the bus.
- **AF**: Detection of a non-acknowledge bit. In this case, the EVF and AF bits are set with an interrupt if the ITE bit is set.
  The AF bit is cleared by reading the I2CSR2 register. However, if read before the completion of the transmission, the AF flag will be set again, thus possibly generating a new interrupt. Software must ensure either that the SCL line is back at 0 before reading the SR2 register, or be able to correctly handle a second interrupt during the 9th pulse of a transmitted byte.

Note: In both cases, SCL line is not held low; however, the SDA line can remain low if the last bits transmitted are all 0. It is then necessary to release both lines by software. The SCL line is not held low while AF=1 but by other flags (SB or BTF) that are set at the same time.

How to release the SDA / SCL lines

Set and subsequently clear the STOP bit while BTF is set. The SDA/SCL lines are released after the transfer of the current byte.

SMBus compatibility

ST7 I^2C is compatible with SMBus V1.1 protocol. It supports all SMBus addressing modes, SMBus bus protocols and CRC-8 packet error checking. Refer to AN1713: SMBus Slave Driver For ST7 I^2C Peripheral.

Master mode

To switch from default Slave mode to Master mode a Start condition generation is needed.

Start condition

Setting the START bit while the BUSY bit is cleared causes the interface to switch to Master mode (M/SL bit set) and generates a Start condition.

Once the Start condition is sent, the EVF and SB bits are set by hardware with an interrupt if the ITE bit is set.

The master then waits for a read of the SR1 register followed by a write in the DR register with the Slave address, **holding the SCL line low** (see *Figure 57* Transfer sequencing EV5).

Slave address transmission

1. The slave address is then sent to the SDA line via the internal shift register.
   - In 7-bit addressing mode, one address byte is sent.
   - In 10-bit addressing mode, sending the first byte including the header sequence causes the following event. The EVF bit is set by hardware with interrupt generation if the ITE bit is set.
2. The master then waits for a read of the SR1 register followed by a write in the DR register, **holding the SCL line low** (see *Figure 57* transfer sequencing EV9).
3. Then the second address byte is sent by the interface.
4. After completion of this transfer (and acknowledge from the slave if the ACK bit is set), the EVF bit is set by hardware with interrupt generation if the ITE bit is set.
5. The master waits for a read of the SR1 register followed by a write in the CR register (for example set PE bit), **holding the SCL line low** (see *Figure 57* transfer sequencing EV6).
6. Next the master must enter receiver or transmitter mode.

Note: In 10-bit addressing mode, to switch the master to receiver mode, software must generate a repeated Start condition and resend the header sequence with the least significant bit set (11110xx1).

Master receiver

Following the address transmission and after SR1 and CR registers have been accessed, the **master receives bytes from the SDA line into the** DR register **via** the internal shift register. After each byte the interface generates in sequence:

- Acknowledge pulse if the ACK bit is set
- EVF and BTF bits are set by hardware with an interrupt if the ITE bit is set.

Then the interface waits for a read of the SR1 register followed by a read of the DR register, **holding the SCL line low** (see *Figure 57* transfer sequencing EV7).

To close the communication: before reading the last byte from the DR register, set the STOP bit to generate the Stop condition. The interface goes automatically back to slave mode (M/SL bit cleared).

Note: In order to generate the non-acknowledge pulse after the last received data byte, the ACK bit must be cleared just before reading the second last data byte.

Master transmitter

Following the address transmission and after SR1 register has been read, **the master sends bytes from** the DR register to **the SDA line** via the internal shift register.

The master waits for a read of the SR1 register followed by a write in the DR register, **holding the SCL line low** (see *Figure 57* Transfer sequencing EV8).

When the acknowledge bit is received, the interface sets EVF and BTF bits with an interrupt if the ITE bit is set.

To close the communication: after writing the last byte to the DR register, set the STOP bit to generate the Stop condition. The interface goes automatically back to slave mode (M/SL bit cleared).

Error cases

- **BERR**: Detection of a Stop or a Start condition during a byte transfer. In this case, the EVF and BERR bits are set by hardware with an interrupt if ITE is set.
  Note that BERR will not be set if an error is detected during the first pulse of each 9-bit transaction:
  Single Master mode
  If a Start or Stop is issued during the first pulse of a 9-bit transaction, the BERR flag will not be set and transfer will continue however the BUSY flag will be reset. To work around this, slave devices should issue a NACK when they receive a misplaced Start or Stop. The reception of a NACK or BUSY by the master in the middle of communication gives the possibility to reinitiate transmission.
  Multimaster mode
  Normally the BERR bit would be set whenever unauthorized transmission takes place while transfer is already in progress. However, an issue will arise if an external master generates an unauthorized Start or Stop while the I^2C master is on the first pulse of a 9-bit transaction. It is possible to work around this by polling the BUSY bit during I^2C master mode transmission. The resetting of the BUSY bit can then be handled in a similar manner as the BERR flag being set.
- **AF**: Detection of a non-acknowledge bit. In this case, the EVF and AF bits are set by hardware with an interrupt if the ITE bit is set. To resume, set the Start or Stop bit.
  The AF bit is cleared by reading the I2CSR2 register. However, if read before the completion of the transmission, the AF flag will be set again, thus possibly generating a new interrupt. Software must ensure either that the SCL line is back at 0 before reading the SR2 register, or be able to correctly handle a second interrupt during the 9th pulse of a transmitted byte.
- **ARLO:** Detection of an arbitration lost condition.
  In this case the ARLO bit is set by hardware (with an interrupt if the ITE bit is set and the interface goes automatically back to slave mode (the M/SL bit is cleared).

Note: In all these cases, the SCL line is not held low; however, the SDA line can remain low if the last bits transmitted are all 0. It is then necessary to release both lines by software. The SCL line is not held low while AF=1 but by other flags (SB or BTF) that are set at the same time.

Figure 57. Transfer sequencing

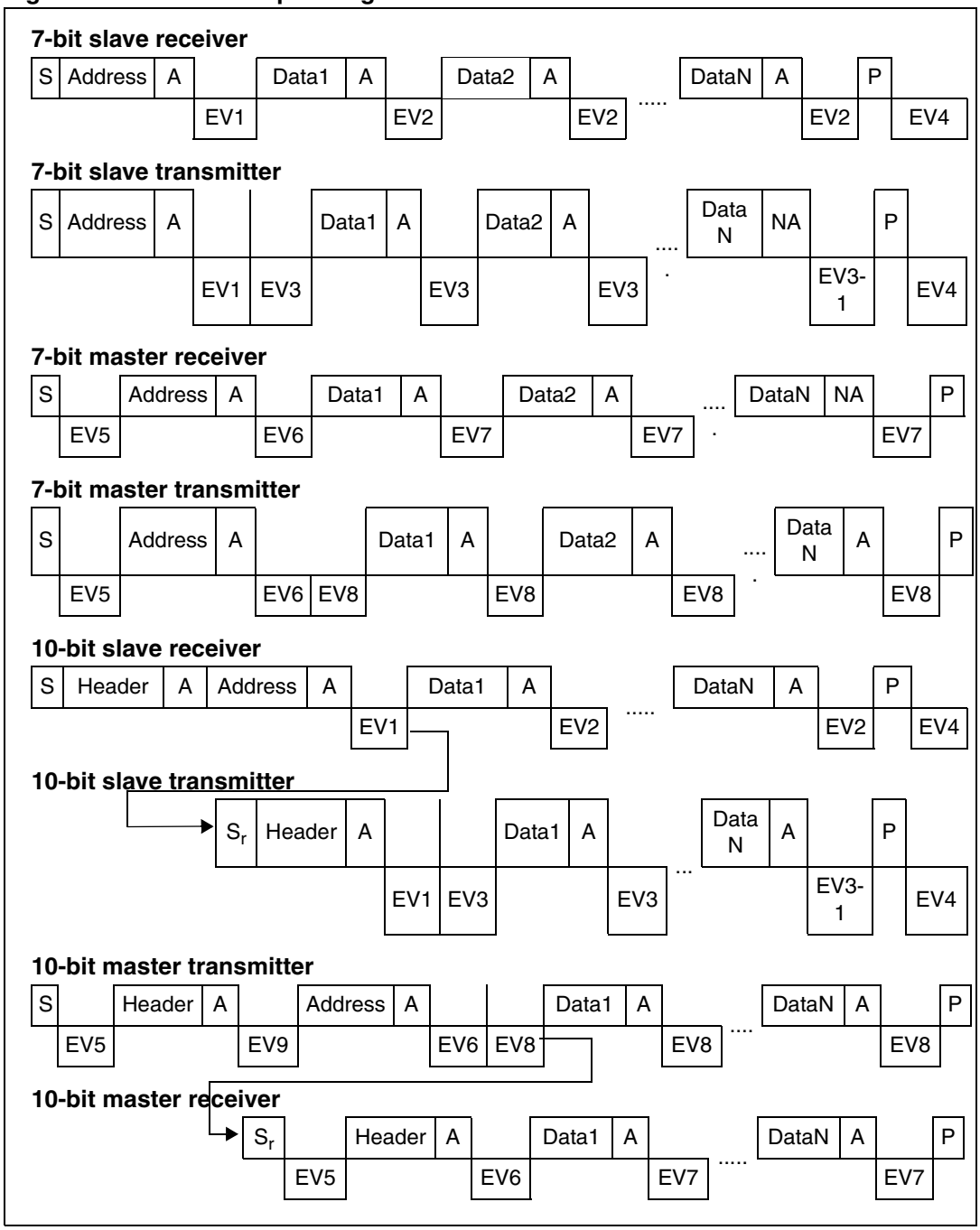

1. S=Start, S_r = Repeated Start, P=Stop, A=Acknowledge, NA=Non-acknowledge, EVx=Event (with interrupt if ITE=1).
2. **EV1:** EVF=1, ADSL=1, cleared by reading SR1 register.
3. **EV2:** EVF=1, BTF=1, cleared by reading SR1 register followed by reading DR register.
4. **EV3:** EVF=1, BTF=1, cleared by reading SR1 register followed by writing DR register.
5. **EV3-1:** EVF=1, AF=1, BTF=1; AF is cleared by reading SR1 register. BTF is cleared by releasing the lines (STOP=1, STOP=0) or by writing DR register (DR=FFh). If lines are released by STOP=1, STOP=0, the

subsequent EV4 is not seen.

6. **EV4:** EVF=1, STOPF=1, cleared by reading SR2 register.
7. **EV5:** EVF=1, SB=1, cleared by reading SR1 register followed by writing DR register.
8. **EV6:** EVF=1, cleared by reading SR1 register followed by writing CR register (for example PE=1).
9. **EV7:** EVF=1, BTF=1, cleared by reading SR1 register followed by reading DR register.
10. **EV8:** EVF=1, BTF=1, cleared by reading SR1 register followed by writing DR register.
11. **EV9:** EVF=1, ADD10=1, cleared by reading SR1 register followed by writing DR register.

11.4.5 Low power modes

Table 42. Effect of low power modes on the I²C interface

Mode	Description
Wait	No effect on I²C interface. I²C interrupts cause the device to exit from Wait mode.
Halt	I²C registers are frozen. In Halt mode, the I²C interface is inactive and does not acknowledge data on the bus. The I²C interface resumes operation when the MCU is woken up by an interrupt with “exit from Halt mode” capability.

11.4.6 Interrupts

Figure 58. Event flags and interrupt generation

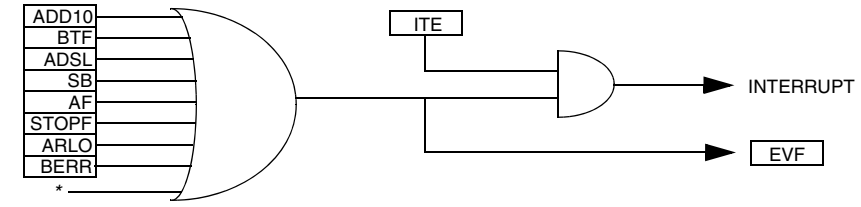

* EVF can also be set by EV6 or an error from the SR2 register.

Table 43. Description of interrupt events

Interrupt event(1)	Event flag	Enable control bit	Exit from Wait	Exit from Halt
10-bit address sent event (Master mode)	ADD10	ITE	Yes	No
End of byte transfer event	BTF		Yes	No
Address matched event (Slave mode)	ADSL		Yes	No
Start bit generation event (Master mode)	SB		Yes	No
Acknowledge failure event	AF		Yes	No
Stop detection event (Slave mode)	STOPF		Yes	No
Arbitration lost event (Multimaster configuration)	ARLO		Yes	No
Bus error event	BERR		Yes	No

1. The I²C interrupt events are connected to the same interrupt vector (see Interrupts chapter). They generate an interrupt if the corresponding Enable Control Bit is set and the I-bit in the CC register is reset (RIM instruction).

11.4.7 Register description

I²C control register (I2CCR)

Reset value: 0000 0000 (00h)

7							0
0	0	PE	ENGC	START	ACK	STOP	ITE
Read / Write							

Bits 7:6 = Reserved. Forced to 0 by hardware.

Bit 5 = **PE** *Peripheral Enable bit*

This bit is set and cleared by software.

0: Peripheral disabled

1: Master/Slave capability

Note: When PE=0, all the bits of the CR register and the SR register except the Stop bit are reset. All outputs are released while PE=0

When PE=1, the corresponding I/O pins are selected by hardware as alternate functions.

*To enable the I²C interface, write the CR register **TWICE** with PE=1 as the first write only activates the interface (only PE is set).*

Bit 4 = **ENGC** *Enable general call bit*

This bit is set and cleared by software. It is also cleared by hardware when the interface is disabled (PE=0). The 00h General Call address is acknowledged (01h ignored).

0: General Call disabled

1: General Call enabled

Note: In accordance with the I²C standard, when GCAL addressing is enabled, an I²C slave can only receive data. It will not transmit data to the master.

Bit 3 = **START** *Generation of a Start condition bit*. This bit is set and cleared by software. It is also cleared by hardware when the interface is disabled (PE=0) or when the Start condition is sent (with interrupt generation if ITE=1).

- In master mode:

  0: No start generation

  1: Repeated start generation
- In slave mode:

  0: No start generation

  1: Start generation when the bus is free

Bit 2 = **ACK** *Acknowledge enable bit*

This bit is set and cleared by software. It is also cleared by hardware when the interface is disabled (PE=0).

0: No acknowledge returned

1: Acknowledge returned after an address byte or a data byte is received

Bit 1 = **STOP** *Generation of a Stop condition bit*

This bit is set and cleared by software. It is also cleared by hardware in master mode. Note: This bit is not cleared when the interface is disabled (PE=0).

- In master mode:

  0: No stop generation

  1: Stop generation after the current byte transfer or after the current Start condition is sent. The STOP bit is cleared by hardware when the Stop condition is sent.

- In slave mode:

  0: No stop generation

  1: Release the SCL and SDA lines after the current byte transfer (BTF=1). In this mode the STOP bit has to be cleared by software.

Bit 0 = **ITE** *Interrupt enable bit*

This bit is set and cleared by software and cleared by hardware when the interface is disabled (PE=0).

0: Interrupts disabled

1: Interrupts enabled

Refer to *Figure 58* for the relationship between the events and the interrupt.

SCL is held low when the ADD10, SB, BTF or ADSL flags or an EV6 event (See *Figure 57*) is detected.

I²C status register 1 (I2CSR1)

Reset value: 0000 0000 (00h)

7							0
EVF	ADD10	TRA	BUSY	BTF	ADSL	M/SL	SB
Read Only							

Bit 7 = **EVF** *Event flag*

This bit is set by hardware as soon as an event occurs. It is cleared by software reading SR2 register in case of error event or as described in *Figure 57*. It is also cleared by hardware when the interface is disabled (PE=0).

0: No event

1: One of the following events has occurred:

- BTF=1 (byte received or transmitted)
- ADSL=1 (Address matched in Slave mode while ACK=1)
- SB=1 (Start condition generated in Master mode)
- AF=1 (No acknowledge received after byte transmission)
- STOPF=1 (Stop condition detected in Slave mode)
- ARLO=1 (Arbitration lost in Master mode)
- BERR=1 (Bus error, misplaced Start or Stop condition detected)
- ADD10=1 (Master has sent header byte)
- Address byte successfully transmitted in Master mode.

Bit 6 = **ADD10** *10-bit addressing in Master mode*

This bit is set by hardware when the master has sent the first byte in 10-bit address mode. It is cleared by software reading SR2 register followed by a write in the DR register of the second address byte. It is also cleared by hardware when the peripheral is disabled (PE=0).

0: No ADD10 event occurred.

1: Master has sent first address byte (header)

Bit 5 = **TRA** *Transmitter/Receiver bit*

When BTF is set, TRA=1 if a data byte has been transmitted. It is cleared automatically when BTF is cleared. It is also cleared by hardware after detection of Stop condition (STOPF=1), loss of bus arbitration (ARLO=1) or when the interface is disabled (PE=0).

0: Data byte received (if BTF=1)

1: Data byte transmitted

Bit 4 = **BUSY** *Bus busy* bit

This bit is set by hardware on detection of a Start condition and cleared by hardware on detection of a Stop condition. It indicates a communication in progress on the bus. The BUSY flag of the I2CSR1 register is cleared if a Bus Error occurs.

0: No communication on the bus

1: Communication ongoing on the bus

Bit 3 = **BTF** *Byte transfer finished bit*

This bit is set by hardware as soon as a byte is correctly received or transmitted with interrupt generation if ITE=1. It is cleared by software reading SR1 register followed by a read or write of DR register. It is also cleared by hardware when the interface is disabled (PE=0).

– Following a byte transmission, this bit is set after reception of the acknowledge clock pulse. In case an address byte is sent, this bit is set only after the EV6 event (See *Figure 57*). BTF is cleared by reading SR1 register followed by writing the next byte in DR register.

– Following a byte reception, this bit is set after transmission of the acknowledge clock pulse if ACK=1. BTF is cleared by reading SR1 register followed by reading the byte from DR register.

The SCL line is held low while BTF=1.

0: byte transfer not done

1: byte transfer succeeded

Bit 2 = **ADSL** *Address matched bit (slave mode).*

This bit is set by hardware as soon as the received slave address matched with the OAR register content or a general call is recognized. An interrupt is generated if ITE=1. It is cleared by software reading SR1 register or by hardware when the interface is disabled (PE=0).

The SCL line is held low while ADSL=1.

0: Address mismatched or not received

1: Received address matched

Bit 1 = **M/SL** *Master/Slave bit*

This bit is set by hardware as soon as the interface is in Master mode (writing START=1). It is cleared by hardware after detecting a Stop condition on the bus or a loss of arbitration (ARLO=1). It is also cleared when the interface is disabled (PE=0).

0: Slave mode

1: Master mode

Bit 0 = **SB** *Start bit (master mode).*

This bit is set by hardware as soon as the Start condition is generated (following a write START=1). An interrupt is generated if ITE=1. It is cleared by software reading SR1 register followed by writing the address byte in DR register. It is also cleared by hardware when the interface is disabled (PE=0).

0: No Start condition

1: Start condition generated

I²C status register 2 (I2CSR2)

Reset value: 0000 0000 (00h)

7							0
0	0	0	AF	STOPF	ARLO	BERR	GCAL
Read Only							

Bits 7:5 = Reserved. Forced to 0 by hardware.

Bit 4 = **AF** *Acknowledge failure* bit

This bit is set by hardware when no acknowledge is returned. An interrupt is generated if ITE=1. It is cleared by software reading SR2 register or by hardware when the interface is disabled (PE=0).

The SCL line is not held low while AF=1 but by other flags (SB or BTF) that are set at the same time.

0: No acknowledge failure

1: Acknowledge failure

Bit 3 = **STOPF** *Stop detection bit (slave mode)*

This bit is set by hardware when a Stop condition is detected on the bus after an acknowledge (if ACK=1). An interrupt is generated if ITE=1. It is cleared by software reading SR2 register or by hardware when the interface is disabled (PE=0).

The SCL line is not held low while STOPF=1.

0: No Stop condition detected

1: Stop condition detected

Bit 2 = **ARLO** *Arbitration lost bit*

This bit is set by hardware when the interface loses the arbitration of the bus to another master. An interrupt is generated if ITE=1. It is cleared by software reading SR2 register or by hardware when the interface is disabled (PE=0).

After an ARLO event the interface switches back automatically to Slave mode (M/SL=0).

The SCL line is not held low while ARLO=1.

0: No arbitration lost detected

1: Arbitration lost detected

Note: In a Multimaster environment, when the interface is configured in master receive mode it does not perform arbitration during the reception of the Acknowledge Bit. Mishandling of the ARLO bit from the I2CSR2 register may occur when a second master simultaneously requests the same data from the same slave and the I²C master does not acknowledge the data. The ARLO bit is then left at 0 instead of being set.

Bit 1 = **BERR** *Bus error bit*

This bit is set by hardware when the interface detects a misplaced Start or Stop condition. An interrupt is generated if ITE=1. It is cleared by software reading SR2 register or by hardware when the interface is disabled (PE=0).

The SCL line is not held low while BERR=1.

0: No misplaced Start or Stop condition

1: Misplaced Start or Stop condition

Note: If a bus error occurs, a Stop or a repeated Start condition should be generated by the Master to re-synchronize communication, get the transmission acknowledged and the bus released for further communication

Bit 0 = **GCAL** *General Call bit (slave mode).*

This bit is set by hardware when a general call address is detected on the bus while ENGC=1. It is cleared by hardware detecting a Stop condition (STOPF=1) or when the interface is disabled (PE=0).

0: No general call address detected on bus

1: general call address detected on bus

I²C clock control register (I2CCCR)

Reset value: 0000 0000 (00h)

7							0
FM/SM	CC6	CC5	CC4	CC3	CC2	CC1	CC0
Read / Write							

Bit 7 = **FM/SM** *Fast/Standard I²C mode bit*

This bit is set and cleared by software. It is not cleared when the interface is disabled (PE=0).

0: Standard I²C mode

1: Fast I²C mode

Bits 6:0 = **CC[6:0]** *7-bit clock divider bits*

These bits select the speed of the bus (F_{SCL}) depending on the I²C mode. They are not cleared when the interface is disabled (PE=0).

Refer to the Electrical Characteristics section for the table of values.

Note: The programmed F_{SCL} assumes no load on SCL and SDA lines.

I²C data register (I2CDR)

Reset value: 0000 0000 (00h)

7							0
D7	D6	D5	D4	D3	D2	D1	D0
Read / Write							

Bits 7:0 = **D[7:0]** *8-bit data register*

These bits contain the byte to be received or transmitted on the bus.

- Transmitter mode: byte transmission start automatically when the software writes in the DR register.
- Receiver mode: the first data byte is received automatically in the DR register using the least significant bit of the address. Then, the following data bytes are received one by one after reading the DR register.

I²C own address register (I2COAR1)

Reset value: 0000 0000 (00h)

7							0
ADD7	ADD6	ADD5	ADD4	ADD3	ADD2	ADD1	ADD0
Read / Write							

- In 7-bit addressing mode

  Bits 7:1 = **ADD[7:1]** *Interface address*. These bits define the I²C bus address of the interface. They are not cleared when the interface is disabled (PE=0).

  Bit 0 = **ADD0** *Address direction bit.*
  This bit is don't care, the interface acknowledges either 0 or 1. It is not cleared when the interface is disabled (PE=0).

Note: Address 01h is always ignored.

- In 10-bit addressing mode

  Bits 7:0 = **ADD[7:0]** *Interface address*. These are the least significant bits of the I²C bus address of the interface. They are not cleared when the interface is disabled (PE=0).

I²C own address register (I2COAR2)

Reset value: 0100 0000 (40h)

7							0
FR1	FR0	0	0	0	ADD9	ADD8	0
Read / Write							

Bits 7:6 = **FR[1:0]** *Frequency bits*

These bits are set by software only when the interface is disabled (PE=0). To configure the interface to I²C specified delays select the value corresponding to the microcontroller frequency f_{CPU}.

Table 44. Configuration of I²C delay times

f_{CPU}	FR1	FR0
< 6 MHz	0	0
6 to 8 MHz	0	1

Bits 5:3 = Reserved

Bits 2:1 = **ADD[9:8]** *Interface address*

These are the most significant bits of the I²C bus address of the interface (10-bit mode only). They are not cleared when the interface is disabled (PE=0).

Bit 0 = Reserved.

Table 45. I²C register mapping and reset values

Address (Hex.)	Register label	7	6	5	4	3	2	1	0
0064h	**I2CCR** Reset value	0	0	PE 0	ENGC 0	START 0	ACK 0	STOP 0	ITE 0
0065h	**I2CSR1** Reset value	EVF 0	ADD10 0	TRA 0	BUSY 0	BTF 0	ADSL 0	M/SL 0	SB 0
0066h	**I2CSR2** Reset value	0	0	0	AF 0	STOPF 0	ARLO 0	BERR 0	GCAL 0
0067h	**I2CCCR** Reset value	FM/SM 0	CC6 0	CC5 0	CC4 0	CC3 0	CC2 0	CC1 0	CC0 0
0068h	**I2COAR1** Reset value	ADD7 0	ADD6 0	ADD5 0	ADD4 0	ADD3 0	ADD2 0	ADD1 0	ADD0 0
0069h	**I2COAR2** Reset value	FR1 0	FR0 1	0	0	0	ADD9 0	ADD8 0	0
006Ah	**I2CDR** Reset value	MSB 0	0	0	0	0	0	0	LSB 0

11.5 10-bit A/D converter (ADC)

11.5.1 Introduction

The on-chip analog to digital converter (ADC) peripheral is a 10-bit, successive approximation converter with internal sample and hold circuitry. This peripheral has up to 10 multiplexed analog input channels (refer to device pin out description) that allow the peripheral to convert the analog voltage levels from up to 10 different sources.

The result of the conversion is stored in a 10-bit data register. The A/D converter is controlled through a control/status register.

11.5.2 Main features

- 10-bit conversion
- Up to 10 channels with multiplexed input
- Linear successive approximation
- Data register (DR) which contains the results
- Conversion complete status flag
- On/off bit (to reduce consumption)

The block diagram is shown in *Figure 59*.

11.5.3 Functional description

Analog power supply

V_{DDA} and V_{SSA} are the high and low level reference voltage pins. In some devices (refer to device pin out description) they are internally connected to the V_{DD} and V_{SS} pins.

Conversion accuracy may therefore be impacted by voltage drops and noise in the event of heavily loaded or badly decoupled power supply lines.

Figure 59. ADC block diagram

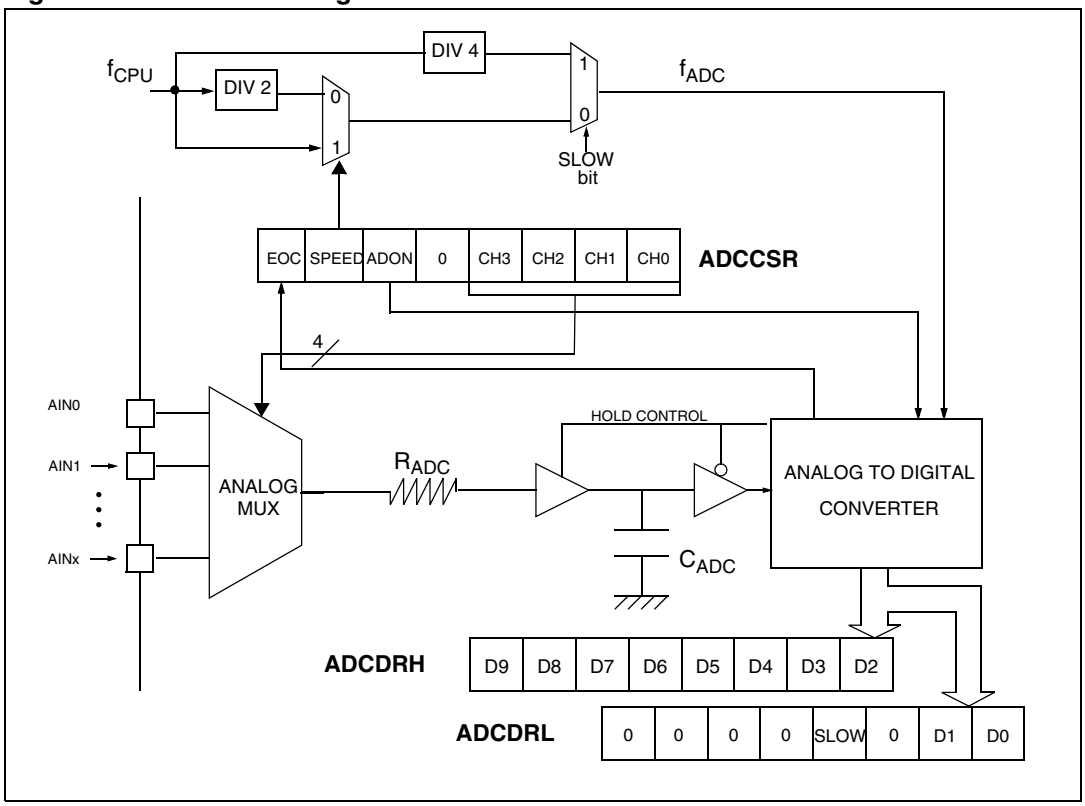

Digital A/D conversion result

The conversion is monotonic, meaning that the result never decreases if the analog input does not and never increases if the analog input does not.

If the input voltage (V_{AIN}) is greater than V_{DDA} (high-level voltage reference) then the conversion result is FFh in the ADCDRH register and 03h in the ADCDRL register (without overflow indication).

If the input voltage (V_{AIN}) is lower than V_{SSA} (low-level voltage reference) then the conversion result in the ADCDRH and ADCDRL registers is 00 00h.

The A/D converter is linear and the digital result of the conversion is stored in the ADCDRH and ADCDRL registers. The accuracy of the conversion is described in the Electrical Characteristics section.

R_{AIN} is the maximum recommended impedance for an analog input signal. If the impedance is too high, this will result in a loss of accuracy due to leakage and sampling not being completed in the alloted time.

Configuring the A/D conversion

The analog input ports must be configured as input, no pull-up, no interrupt (see *Section 10: I/O ports*). Using these pins as analog inputs does not affect the ability of the port to be read as a logic input.

To assign the analog channel to convert, select the CH[2:0] bits in the ADCCSR register.

Set the ADON bit to enable the A/D converter and to start the conversion. From this time on, the ADC performs a continuous conversion of the selected channel.

When a conversion is complete:

- The EOC bit is set by hardware.
- The result is in the ADCDR registers.

A read to the ADCDRH or a write to any bit of the ADCCSR register resets the EOC bit.

To read the 10 bits, perform the following steps:

1. Poll the EOC bit
2. Read ADCDRL
3. Read ADCDRH. This clears EOC automatically.

To read only 8 bits, perform the following steps:

1. Poll EOC bit
2. Read ADCDRH. This clears EOC automatically.

Changing the conversion channel

The application can change channels during conversion. When software modifies the CH[3:0] bits in the ADCCSR register, the current conversion is stopped, the EOC bit is cleared, and the A/D converter starts converting the newly selected channel.

11.5.4 Low power modes

The A/D converter may be disabled by resetting the ADON bit. This feature allows reduced power consumption when no conversion is needed and between single shot conversions.

Table 46. Effect of low power modes on the A/D converter

Mode	Description
Wait	No effect on A/D converter
Halt	A/D Converter disabled. After wakeup from Halt mode, the A/D Converter requires a stabilization time t_{STAB} (see Electrical Characteristics) before accurate conversions can be performed.

11.5.5 Interrupts

None.

11.5.6 Register description

Control/status register (ADCCSR)

Reset value: 0000 0000 (00h)

7							0
EOC	SPEED	ADON	0	CH3	CH2	CH1	CH0
Read only	Read/write						

Bit 7 = **EOC** *End of conversion bit*

This bit is set by hardware. It is cleared by hardware when software reads the ADCDRH register or writes to any bit of the ADCCSR register.

0: Conversion is not complete

1: Conversion complete

Bit 6 = **SPEED** *ADC clock selection bit*

This bit is set and cleared by software. It is used together with the SLOW bit to configure the ADC clock speed. Refer to the table in the SLOW bit description (ADCDRL register).

Bit 5 = **ADON** *A/D converter ON bit*

This bit is set and cleared by software.

0: A/D converter is switched off

1: A/D converter is switched on

Bit 4 = Reserved, must be kept cleared.

Bits 3:0 = **CH[3:0]** *Channel selection*

These bits select the analog input to convert. They are set and cleared by software.

Table 47. Channel selection using CH[3:0]

Channel pin[1]	CH3	CH2	CH1	CH0
AIN0	0	0	0	0
AIN1	0	0	0	1
AIN2	0	0	1	0
AIN3	0	0	1	1
AIN4	0	1	0	0
AIN5	0	1	0	1
AIN6	0	1	1	0
AIN7	0	1	1	1
AIN8	1	0	0	0
AIN9	1	0	0	1

1. The number of channels is device dependent. Refer to the device pinout description.

Data register high (ADCDRH)

Reset value: xxxx xxxx (xxh)

7							0
D9	D8	D7	D6	D5	D4	D3	D2
Read only							

Bits 7:0 = **D[9:2]** *MSB of analog converted value*

ADC control/data register low (ADCDRL)

Reset value: 0000 00xx (0xh)

7							0
0	0	0	0	SLOW	0	D1	D0
Read/write							

Bits 7:4 = Reserved. Forced by hardware to 0.

Bit 3 = **SLOW** *Slow mode bit*

This bit is set and cleared by software. It is used together with the SPEED bit in the ADCCSR register to configure the ADC clock speed as shown on the table below.

Table 48. Configuring the ADC clock speed

f_{ADC}(1)	SLOW	SPEED
$f_{CPU}/2$	0	0
f_{CPU}	0	1
$f_{CPU}/4$	1	x

1. The maximum allowed value of f_{ADC} is 4 MHz (see *Section 13.11 on page 170*)

Bit 2 = Reserved. Forced by hardware to 0.

Bits 1:0 = **D[1:0]** *LSB of analog converted value*

Table 49. ADC register mapping and reset values

Address (Hex.)	Register label	7	6	5	4	3	2	1	0
0036h	**ADCCSR** Reset value	EOC 0	SPEED 0	ADON 0	0 0	CH3 0	CH2 0	CH1 0	CH0 0
0037h	**ADCDRH** Reset value	D9 x	D8 x	D7 x	D6 x	D5 x	D4 x	D3 x	D2 x
0038h	**ADCDRL** Reset value	0 0	0 0	0 0	0	SLOW 0	0	D1 x	D0 x

12 Instruction set

12.1 ST7 addressing modes

The ST7 core features 17 different addressing modes which can be classified in seven main groups:

Table 50. Description of addressing modes

Addressing mode	Example
Inherent	nop
Immediate	ld A,#$55
Direct	ld A,$55
Indexed	ld A,($55,X)
Indirect	ld A,([$55],X)
Relative	jrne loop
Bit operation	bset byte,#5

The ST7 instruction set is designed to minimize the number of bytes required per instruction: To do so, most of the addressing modes may be subdivided in two submodes called long and short:

- Long addressing mode is more powerful because it can use the full 64 Kbyte address space, however it uses more bytes and more CPU cycles.
- Short addressing mode is less powerful because it can generally only access page zero (0000h - 00FFh range), but the instruction size is more compact, and faster. All memory to memory instructions use short addressing modes only (CLR, CPL, NEG, BSET, BRES, BTJT, BTJF, INC, DEC, RLC, RRC, SLL, SRL, SRA, SWAP)

The ST7 Assembler optimizes the use of long and short addressing modes.

Table 51. ST7 addressing mode overview

Mode			Syntax	Destination/ source	Pointer address	Pointer size	Length (bytes)
Inherent			nop				+ 0
Immediate			ld A,#$55				+ 1
Short	Direct		ld A,$10	00..FF			+ 1
Long	Direct		ld A,$1000	0000..FFFF			+ 2
No Offset	Direct	Indexed	ld A,(X)	00..FF			+ 0 (with X register) + 1 (with Y register)
Short	Direct	Indexed	ld A,($10,X)	00..1FE			+ 1
Long	Direct	Indexed	ld A,($1000,X)	0000..FFFF			+ 2
Short	Indirect		ld A,[$10]	00..FF	00..FF	byte	+ 2
Long	Indirect		ld A,[$10.w]	0000..FFFF	00..FF	word	+ 2
Short	Indirect	Indexed	ld A,([$10],X)	00..1FE	00..FF	byte	+ 2

Table 51. ST7 addressing mode overview (continued)

Mode			Syntax	Destination/ source	Pointer address	Pointer size	Length (bytes)
Long	Indirect	Indexed	ld A,([$10.w],X)	0000..FFFF	00..FF	word	+ 2
Relative	Direct		jrne loop	PC-128/PC+127(1)			+ 1
Relative	Indirect		jrne [$10]	PC-128/PC+127(1)	00..FF	byte	+ 2
Bit	Direct		bset $10,#7	00..FF			+ 1
Bit	Indirect		bset [$10],#7	00..FF	00..FF	byte	+ 2
Bit	Direct	Relative	btjt $10,#7,skip	00..FF			+ 2
Bit	Indirect	Relative	btjt [$10],#7,skip	00..FF	00..FF	byte	+ 3

1. At the time the instruction is executed, the Program Counter (PC) points to the instruction following JRxx.

12.1.1 Inherent mode

All Inherent instructions consist of a single byte. The opcode fully specifies all the required information for the CPU to process the operation.

Table 52. Instructions supporting inherent addressing mode

Instruction	Function
NOP	No operation
TRAP	S/W interrupt
WFI	Wait for interrupt (low power mode)
HALT	Halt oscillator (lowest power mode)
RET	Subroutine return
IRET	Interrupt subroutine return
SIM	Set interrupt mask
RIM	Reset interrupt mask
SCF	Set carry flag
RCF	Reset carry flag
RSP	Reset stack pointer
LD	Load
CLR	Clear
PUSH/POP	Push/Pop to/from the stack
INC/DEC	Increment/decrement
TNZ	Test negative or zero
CPL, NEG	1 or 2 complement

Table 52. Instructions supporting inherent addressing mode (continued)

Instruction	Function
MUL	Byte multiplication
SLL, SRL, SRA, RLC, RRC	Shift and rotate operations
SWAP	Swap nibbles

12.1.2 Immediate mode

Immediate instructions have 2 bytes, the first byte contains the opcode, the second byte contains the operand value.

Table 53. Instructions supporting inherent immediate addressing mode

Immediate instruction	Function
LD	Load
CP	Compare
BCP	Bit compare
AND, OR, XOR	Logical operations
ADC, ADD, SUB, SBC	Arithmetic operations

12.1.3 Direct modes

In Direct instructions, the operands are referenced by their memory address.

The direct addressing mode consists of two submodes:

Direct (short) addressing mode

The address is a byte, thus requires only 1 byte after the opcode, but only allows 00 - FF addressing space.

Direct (long) addressing mode

The address is a word, thus allowing 64 Kbyte addressing space, but requires 2 bytes after the opcode.

12.1.4 Indexed modes (no offset, short, long)

In this mode, the operand is referenced by its memory address, which is defined by the unsigned addition of an index register (X or Y) with an offset.

The indirect addressing mode consists of three submodes:

Indexed mode (no offset)

There is no offset (no extra byte after the opcode), and allows 00 - FF addressing space.

Indexed mode (short)

The offset is a byte, thus requires only 1 byte after the opcode and allows 00 - 1FE addressing space.

Indexed mode (long)

The offset is a word, thus allowing 64 Kbyte addressing space and requires 2 bytes after the opcode.

12.1.5 Indirect modes (short, long)

The required data byte to do the operation is found by its memory address, located in memory (pointer).

The pointer address follows the opcode. The indirect addressing mode consists of two submodes:

Indirect mode (short)

The pointer address is a byte, the pointer size is a byte, thus allowing 00 - FF addressing space, and requires 1 byte after the opcode.

Indirect mode (long)

The pointer address is a byte, the pointer size is a word, thus allowing 64 Kbyte addressing space, and requires 1 byte after the opcode.

12.1.6 Indirect indexed modes (short, long)

This is a combination of indirect and short indexed addressing modes. The operand is referenced by its memory address, which is defined by the unsigned addition of an index register value (X or Y) with a pointer value located in memory. The pointer address follows the opcode.

The indirect indexed addressing mode consists of two submodes:

Indirect indexed mode (short)

The pointer address is a byte, the pointer size is a byte, thus allowing 00 - 1FE addressing space, and requires 1 byte after the opcode.

Indirect indexed mode (long)

The pointer address is a byte, the pointer size is a word, thus allowing 64 Kbyte addressing space, and requires 1 byte after the opcode.

Table 54. Instructions supporting direct, indexed, indirect and indirect indexed addressing modes

Instructions	Function
Long and short instructions	
LD	Load
CP	Compare
AND, OR, XOR	Logical operations
ADC, ADD, SUB, SBC	Arithmetic addition/subtraction operations
BCP	Bit compare

Table 54. Instructions supporting direct, indexed, indirect and indirect indexed addressing modes (continued)

Instructions	Function
Short instructions only	
CLR	Clear
INC, DEC	Increment/decrement
TNZ	Test negative or zero
CPL, NEG	1 or 2 complement
BSET, BRES	Bit operations
BTJT, BTJF	Bit test and jump operations
SLL, SRL, SRA, RLC, RRC	Shift and rotate operations
SWAP	Swap nibbles
CALL, JP	Call or jump subroutine

12.1.7 Relative modes (direct, indirect)

This addressing mode is used to modify the PC register value by adding an 8-bit signed offset to it.

Table 55. Instructions supporting relative modes

Available Relative Direct/Indirect instructions	Function
JRxx	Conditional jump
CALLR	Call relative

The relative addressing mode consists of two submodes:

Relative mode (direct)

The offset follows the opcode.

Relative mode (indirect)

The offset is defined in memory, of which the address follows the opcode.

12.2 Instruction groups

The ST7 family devices use an instruction set consisting of 63 instructions. The instructions may be subdivided into 13 main groups as illustrated in the following table:

Table 56. ST7 instruction set

Instructions								
Load and Transfer	LD	CLR						
Stack operation	PUSH	POP	RSP					
Increment/decrement	INC	DEC						
Compare and tests	CP	TNZ	BCP					
Logical operations	AND	OR	XOR	CPL	NEG			
Bit operation	BSET	BRES						
Conditional bit test and branch	BTJT	BTJF						
Arithmetic operations	ADC	ADD	SUB	SBC	MUL			
Shift and rotate	SLL	SRL	SRA	RLC	RRC	SWAP	SLA	
Unconditional jump or call	JRA	JRT	JRF	JP	CALL	CALLR	NOP	RET
Conditional branch	JRxx							
Interruption management	TRAP	WFI	HALT	IRET				
Condition Code Flag modification	SIM	RIM	SCF	RCF				

Using a prebyte

The instructions are described with 1 to 4 bytes.

In order to extend the number of available opcodes for an 8-bit CPU (256 opcodes), three different prebyte opcodes are defined. These prebytes modify the meaning of the instruction they precede.

The whole instruction becomes by:

PC-2 End of previous instruction

PC-1 Prebyte

PC Opcode

PC+1 Additional word (0 to 2) according to the number of bytes required to compute the effective address

These prebytes enable instruction in Y as well as indirect addressing modes to be implemented. They precede the opcode of the instruction in X or the instruction using direct addressing mode. The prebytes are:

PDY 90 Replace an X based instruction using immediate, direct, indexed, or inherent addressing mode by a Y one.

PIX 92 Replace an instruction using direct, direct bit or direct relative addressing mode to an instruction using the corresponding indirect addressing mode.
It also changes an instruction using X indexed addressing mode to an instruction using indirect X indexed addressing mode.

PIY 91 Replace an instruction using X indirect indexed addressing mode by a Y one.

12.2.1 Illegal opcode reset

In order to provide enhanced robustness to the device against unexpected behavior, a system of illegal opcode detection is implemented: a reset is generated if the code to be executed does not correspond to any opcode or prebyte value. This, combined with the Watchdog, allows the detection and recovery from an unexpected fault or interference.

A valid prebyte associated with a valid opcode forming an unauthorized combination does not generate a reset.

Table 57. Illegal opcode detection

Mnemo	Description	Function/Example	Dst	Src		H	I	N	Z	C
ADC	Add with Carry	A = A + M + C	A	M		H		N	Z	C
ADD	Addition	A = A + M	A	M		H		N	Z	C
AND	Logical And	A = A . M	A	M				N	Z	
BCP	Bit compare A, Memory	tst (A . M)	A	M				N	Z	
BRES	Bit reset	bres Byte, #3	M							
BSET	Bit Set	bset Byte, #3	M							
BTJF	Jump if bit is false (0)	btjf Byte, #3, Jmp1	M							C
BTJT	Jump if bit is true (1)	btjt Byte, #3, Jmp1	M							C
CALL	Call subroutine									
CALLR	Call subroutine relative									
CLR	Clear		reg, M					0	1	
CP	Arithmetic compare	tst(Reg - M)	reg	M				N	Z	C
CPL	One Complement	A = FFH-A	reg, M					N	Z	1
DEC	Decrement	dec Y	reg, M					N	Z	
HALT	Halt						0			
IRET	Interrupt routine return	Pop CC, A, X, PC				H	I	N	Z	C
INC	Increment	inc X	reg, M					N	Z	
JP	Absolute jump	jp [TBL.w]								
JRA	Jump relative always									
JRT	Jump relative									
JRF	Never jump	jrf *								
JRIH	Jump if ext. interrupt = 1									
JRIL	Jump if ext. interrupt = 0									
JRH	Jump if H = 1	H = 1 ?								
JRNH	Jump if H = 0	H = 0 ?								
JRM	Jump if I = 1	I = 1 ?								
JRNM	Jump if I = 0	I = 0 ?								
JRMI	Jump if N = 1 (minus)	N = 1 ?								

Table 57. Illegal opcode detection (continued)

Mnemo	Description	Function/Example	Dst	Src		H	I	N	Z	C
JRPL	Jump if N = 0 (plus)	N = 0 ?								
JREQ	Jump if Z = 1 (equal)	Z = 1 ?								
JRNE	Jump if Z = 0 (not equal)	Z = 0 ?								
JRC	Jump if C = 1	C = 1 ?								
JRNC	Jump if C = 0	C = 0 ?								
JRULT	Jump if C = 1	Unsigned <								
JRUGE	Jump if C = 0	Jmp if unsigned >=								
JRUGT	Jump if (C + Z = 0)	Unsigned >								
JRULE	Jump if (C + Z = 1)	Unsigned <=								
LD	Load	dst <= src	reg, M	M, reg				N	Z	
MUL	Multiply	X,A = X * A	A, X, Y	X, Y, A		0				0
NEG	Negate (2's compl)	neg $10	reg, M					N	Z	C
NOP	No Operation									
OR	OR operation	A = A + M	A	M				N	Z	
POP	Pop from the stack	pop reg	reg	M						
		pop CC	CC	M		H	I	N	Z	C
PUSH	Push onto the stack	push Y	M	reg, CC						
RCF	Reset carry flag	C = 0								0
RET	Subroutine Return									
RIM	Enable Interrupts	I = 0					0			
RLC	Rotate left true C	C <= Dst <= C	reg, M					N	Z	C
RRC	Rotate right true C	C => Dst => C	reg, M					N	Z	C
RSP	Reset stack pointer	S = Max allowed								
SBC	Subtract with carry	A = A - M - C	A	M				N	Z	C
SCF	Set carry flag	C = 1								1
SIM	Disable interrupts	I = 1					1			
SLA	Shift left arithmetic	C <= Dst <= 0	reg, M					N	Z	C
SLL	Shift left logic	C <= Dst <= 0	reg, M					N	Z	C
SRL	Shift right logic	0 => Dst => C	reg, M					0	Z	C
SRA	Shift right arithmetic	Dst7 => Dst => C	reg, M					N	Z	C
SUB	Subtraction	A = A - M	A	M				N	Z	C
SWAP	SWAP nibbles	Dst[7..4]<=>Dst[3..0]	reg, M					N	Z	
TNZ	Test for neg & zero	tnz lbl1						N	Z	
TRAP	S/W trap	S/W interrupt					1			

Table 57. Illegal opcode detection (continued)

Mnemo	Description	Function/Example	Dst	Src		H	I	N	Z	C
WFI	Wait for interrupt						0			
XOR	Exclusive OR	A = A XOR M	A	M				N	Z	

13 Electrical characteristics

13.1 Parameter conditions

Unless otherwise specified, all voltages are referred to V_{SS}.

13.1.1 Minimum and maximum values

Unless otherwise specified the minimum and maximum values are guaranteed in the worst conditions of ambient temperature, supply voltage and frequencies by tests in production on 100% of the devices with an ambient temperature at T_A = 25 °C and T_A = $T_A$max (given by the selected temperature range).

Data based on characterization results, design simulation and/or technology characteristics are indicated in the table footnotes and are not tested in production. Based on characterization, the minimum and maximum values refer to sample tests and represent the mean value plus or minus three times the standard deviation (mean±3Σ).

13.1.2 Typical values

Unless otherwise specified, typical data are based on T_A = 25 °C, V_{DD} = 5 V (for the 4.5 V≤V_{DD}≤5.5 V voltage range) and V_{DD} = 3.3 V (for the 3.0 V≤V_{DD}≤3.6 V voltage range). They are given only as design guidelines and are not tested.

13.1.3 Typical curves

Unless otherwise specified, all typical curves are given only as design guidelines and are not tested.

13.1.4 Loading capacitor

The loading conditions used for pin parameter measurement are shown in *Figure 60*.

Figure 60. Pin loading conditions

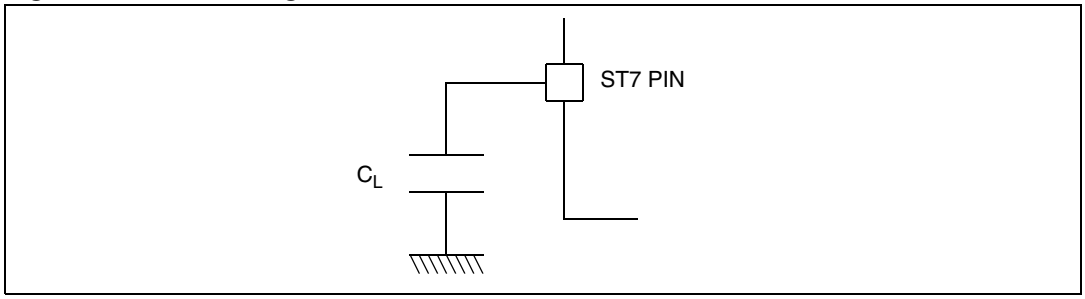

13.1.5 Pin input voltage

The input voltage measurement on a pin of the device is described in *Figure 61*.

Figure 61. Pin input voltage

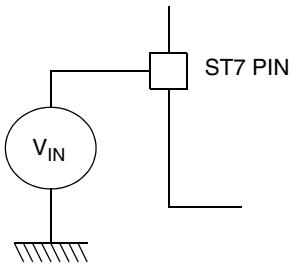

13.2 Absolute maximum ratings

Stresses above those listed as “absolute maximum ratings” may cause permanent damage to the device. This is a stress rating only and functional operation of the device under these conditions is not implied. Exposure to maximum rating conditions for extended periods may affect device reliability.

Table 58. Voltage characteristics

Symbol	Ratings	Maximum value	Unit
V_{DD} - V_{SS}	Supply voltage	7.0	V
V_{IN}	Input voltage on any pin(1)(2)	V_{SS}-0.3 to V_{DD}+0.3	
$V_{ESD(HBM)}$	Electrostatic discharge voltage (Human body model)	see *Section 13.8.3 on page 157*	
$V_{ESD(CDM)}$	Electrostatic discharge voltage (Charge device model)		

1. Directly connecting the $\overline{RESET}$ and I/O pins to V_{DD} or V_{SS} could damage the device if an unintentional internal reset is generated or an unexpected change of the I/O configuration occurs (for example, due to a corrupted program counter). To guarantee safe operation, this connection has to be done through a pull-up or pull-down resistor (typical: 4.7 kΩ for $\overline{RESET}$, 10 kΩ for I/Os). Unused I/O pins must be tied in the same way to V_{DD} or V_{SS} according to their reset configuration.
2. $I_{INJ(PIN)}$ must never be exceeded. This is implicitly insured if V_{IN} maximum is respected. If V_{IN} maximum cannot be respected, the injection current must be limited externally to the $I_{INJ(PIN)}$ value. A positive injection is induced by $V_{IN}>V_{DD}$ while a negative injection is induced by $V_{IN}<V_{SS}$. For true open-drain pads, there is no positive injection current, and the corresponding V_{IN} maximum must always be respected

Table 59. Current characteristics

Symbol	Ratings	Maximum value	Unit
I_{VDD}	Total current into V_{DD} power lines (source)(1)	75	mA
I_{VSS}	Total current out of V_{SS} ground lines (sink)(1)	150	
I_{IO}	Output current sunk by any standard I/O and control pin	20	
	Output current sunk by any high sink I/O pin	40	
	Output current source by any I/Os and control pin	- 25	
$I_{INJ(PIN)}$(2)(3)	Injected current on $\overline{RESET}$ pin	± 5	
	Injected current on OSC1/CLKIN and OSC2 pins	± 5	
	Injected current on any other pin(4)	± 5	
$\Sigma I_{INJ(PIN)}$(2)	Total injected current (sum of all I/O and control pins)(4)	± 20	

1. All power (V_{DD}) and ground (V_{SS}) lines must always be connected to the external supply.
2. $I_{INJ(PIN)}$ must never be exceeded. This is implicitly insured if V_{IN} maximum is respected. If V_{IN} maximum cannot be respected, the injection current must be limited externally to the $I_{INJ(PIN)}$ value. A positive injection is induced by $V_{IN}>V_{DD}$ while a negative injection is induced by $V_{IN}<V_{SS}$. For true open-drain pads, there is no positive injection current, and the corresponding V_{IN} maximum must always be respected
3. Negative injection disturbs the analog performance of the device. In particular, it induces leakage currents throughout the device including the analog inputs. To avoid undesirable effects on the analog functions, care must be taken:
   - Analog input pins must have a negative injection less than 0.8 mA (assuming that the impedance of the analog voltage is lower than the specified limits)
   - Pure digital pins must have a negative injection less than 1.6 mA. In addition, it is recommended to inject the current as far as possible from the analog input pins.
4. When several inputs are submitted to a current injection, the maximum $\Sigma I_{INJ(PIN)}$ is the absolute sum of the positive and negative injected currents (instantaneous values). These results are based on characterization with $\Sigma I_{INJ(PIN)}$ maximum current injection on four I/O port pins of the device.

Table 60. Thermal characteristics

Symbol	Ratings	Value	Unit
T_{STG}	Storage temperature range	-65 to +150	°C
T_J	Maximum junction temperature (see *Table 98: Thermal characteristics on page 184*)		

13.3 Operating conditions

13.3.1 General operating conditions

T_A = -40 to +125 °C unless otherwise specified.

Table 61. General operating conditions

Symbol	Parameter	Conditions	Min	Max	Unit
V_{DD}	Supply voltage	f_{CPU} = 4 MHz max.	2.4	5.5	V
		f_{CPU} = 8 MHz max.	3.3	5.5	
f_{CPU}	CPU clock frequency	3.3 V≤V_{DD}≤ 5.5 V	up to 8		MHz
		2.4 V≤V_{DD}< 3.3 V	up to 4		

Figure 62. f_{CPU} maximum operating frequency versus V_{DD} supply voltage

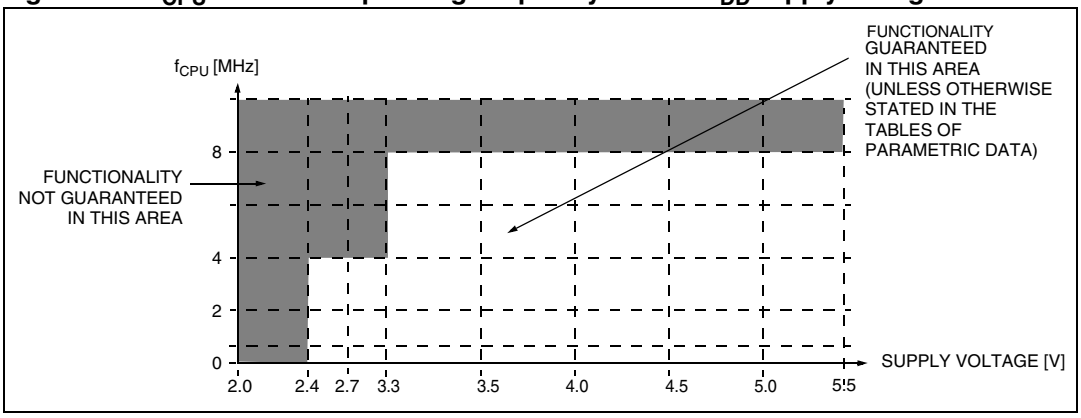

13.3.2 Operating conditions with low voltage detector (LVD)

T_A = -40 to 125 °C unless otherwise specified.

Table 62. Operating characteristics with LVD

Symbol	Parameter	Conditions	Min	Typ	Max	Unit
$V_{IT+(LVD)}$	Reset release threshold (V_{DD} rise)	High threshold Med. threshold Low threshold	3.9 3.2 2.5	4.2 3.5 2.7	4.5 3.8 3.0	V
$V_{IT-(LVD)}$	Reset generation threshold (V_{DD} fall)	High threshold Med. threshold Low threshold	3.7 3.0 2.4	4.0 3.3 2.6	4.3 3.6 2.9	
V_{hys}	LVD voltage threshold hysteresis	$V_{IT+(LVD)}$-$V_{IT-(LVD)}$		150		mV
V_{tPOR}	V_{DD} rise time rate(1)(2)		2			µs/V
$I_{DD(LVD)}$	LVD/AVD current consumption	V_{DD} = 5 V		80	140	µA

1. Not tested in production. The V_{DD} rise time rate condition is needed to ensure a correct device power-on and LVD reset release. When the V_{DD} slope is outside these values, the LVD may not release properly the reset of the MCU.

2. Use of LVD with capacitive power supply: with this type of power supply, if power cuts occur in the application, it is recommended to pull V_{DD} down to 0 V to ensure optimum restart conditions. Refer to circuit example in *Figure 96 on page 169*.

13.3.3 Auxiliary voltage detector (AVD) thresholds

T_A = -40 to 125 °C unless otherwise specified

Table 63. Operating characteristics with AVD(1)

Symbol	Parameter	Conditions	Min (2)	Typ(2)	Max(2)	Unit
$V_{IT+(AVD)}$	1=>0 AVDF flag toggle threshold (V_{DD} rise)	High threshold Med. threshold Low threshold	4.0 3.4 2.6	4.4 3.7 2.9	4.8 4.1 3.2	V
$V_{IT-(AVD)}$	0=>1 AVDF flag toggle threshold (V_{DD} fall)	High threshold Med. threshold Low threshold	3.9 3.3 2.5	4.3 3.6 2.8	4.7 4.0 3.1	
V_{hys}	AVD voltage threshold hysteresis	$V_{IT+(AVD)}$-$V_{IT-(AVD)}$		150		mV

1. Refer to *Section : Monitoring the VDD main supply*.
2. Not tested in production, guaranteed by characterization.

13.3.4 Voltage drop between AVD flag setting and LVD reset generation

Table 64. Voltage drop

Parameter	Min(1)	Typ(1)	Max(1)	Unit
AVD med. threshold - AVD low threshold	800	850	950	mV
AVD high threshold - AVD low threshold	1400	1450	1550	
AVD high threshold - AVD med. threshold	600	650	750	
AVD low threshold - LVD low threshold	100	200	250	
AVD med threshold - LVD low threshold	950	1050	1150	
AVD med threshold - LVD med. threshold	250	300	400	
AVD high threshold - LVD low threshold	1600	1700	1800	
AVD high threshold - LVD med. threshold	900	1000	1050	

1. Not tested in production, guaranteed by characterization.

13.3.5 Internal RC oscillator

To improve clock stability and frequency accuracy, it is recommended to place a decoupling capacitor, typically 100 nF, between the V_{DD} and V_{SS} pins as close as possible to the ST7 device

Internal RC oscillator calibrated at 5.0 V

The ST7 internal clock can be supplied by an internal RC oscillator (selectable by option byte).

Table 65. Internal RC oscillator characteristics (5.0 V calibration)

Symbol	Parameter	Conditions	Min	Typ	Max	Unit
f_{RC}	Internal RC oscillator frequency	RCCR = FF (reset value), T_A = 25 °C, V_{DD} = 5 V		5.5		MHz
		RCCR=RCCR0(1), T_A = 25 °C, V_{DD} = 5 V	7.84	8	8.16	
$f_{G(RC)}$	RC trimming granularity	T_A = 25 °C, V_{DD} = 5 V		6		kHz
ACC_{RC}	Accuracy of Internal RC oscillator with RCCR=RCCR0(1)	T_A = 25 °C, V_{DD} = 4.5 to 5.5 V(2)	-2		2	%
		T_A= 0 to +85 °C, V_{DD} = 4.5 to 5.5 V(2)	-2.5		4	%
		T_A = 0 to +125 °C, V_{DD} = 4.5 to 5.5 V(2)	-3		6	%
		T_A = -40 to 0 °C, V_{DD} = 4.5 to 5.5 V(2)	-4		2.5	%
$t_{su(RC)}$	RC oscillator setup time	T_A = 25 °C, V_{DD} = 5 V		4 (3)		µs

1. See *Section 7.1.1: Internal RC oscillator*
2. Tested in production at 5.0 V only
3. Not tested in production

Internal RC oscillator calibrated at 3.3 V

The ST7 internal clock can be supplied by an internal RC oscillator (selectable by option byte).

Table 66. Internal RC oscillator characteristics (3.3 V calibration)

Symbol	Parameter	Conditions	Min	Typ	Max	Unit
f_{RC}	Internal RC oscillator frequency	RCCR = FF (reset value), T_A=25 °C,V_{DD}=3.3 V		4.3		MHz
		RCCR = RCCR1(1), T_A = 25 °C, V_{DD} = 3.3 V	7.84	8	8.16	

Table 66. Internal RC oscillator characteristics (3.3 V calibration)

Symbol	Parameter	Conditions	Min	Typ	Max	Unit
ACC_{RC}	Accuracy of internal RC oscillator with RCCR=RCCR1 1)	T_A= 25 °C, V_{DD} = 3.0 to 3.6 V (2)	-2		2	%
		T_A= 0 to +85 °C, V_{DD} = 3.0 to 3.6 V (2)	-2.5		4	%
		T_A = 0 to +125 °C, V_{DD} = 3.0 to 3.6 V (2)	-3		6	%
		T_A = -40 to 0 °C, V_{DD} = 3.0 to 3.6 V (2)	-4		2.5	%
$t_{su(RC)}$	RC oscillator setup time	T_A = 25 °C, V_{DD} = 3.3 V		4 (2)		µs

1. See *Section 7.1.1: Internal RC oscillator*
2. Tested in production at 3.3 V only

Figure 63. Frequency vs voltage at four different ambient temperatures (RC at 5 V)

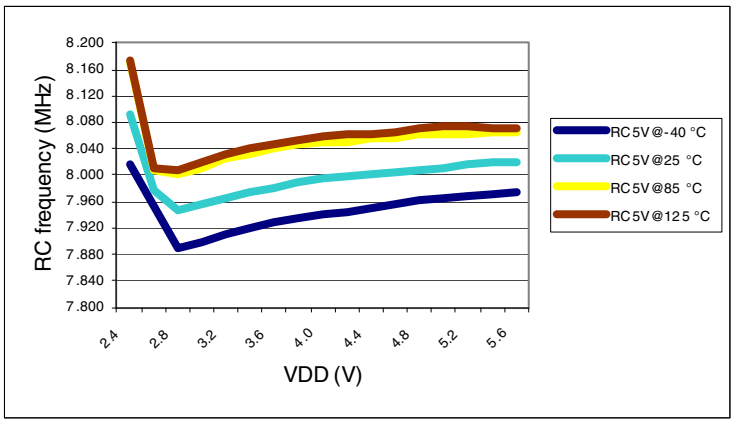

Figure 64. Frequency vs voltage at four different ambient temperatures (RC at 3.3 V)

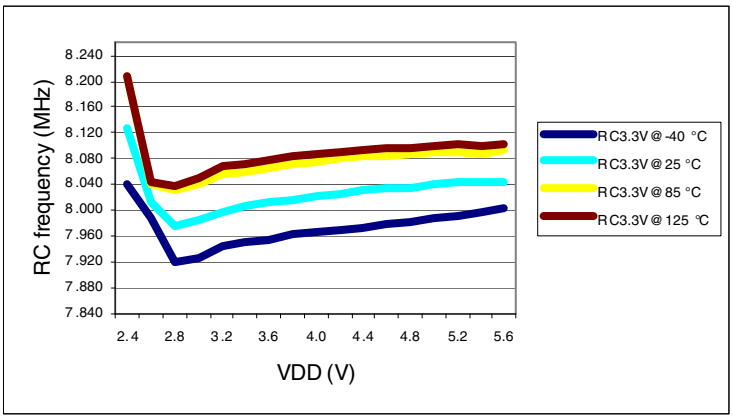

Figure 65. Accuracy in % vs voltage at 4 different ambient temperatures (RC at 5 V)

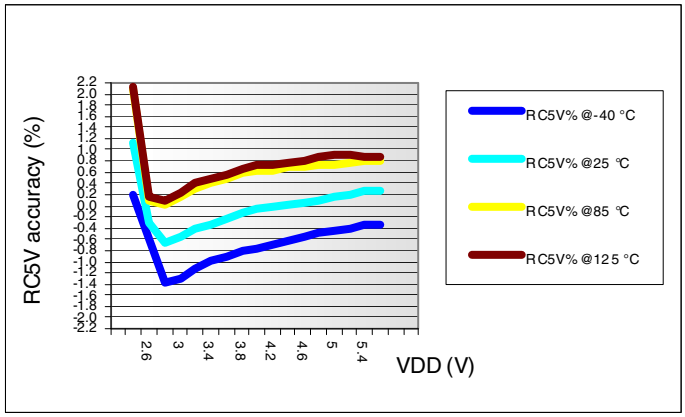

Figure 66. Accuracy in % vs voltage at 4 different ambient temperatures (RC at 3.3 V)

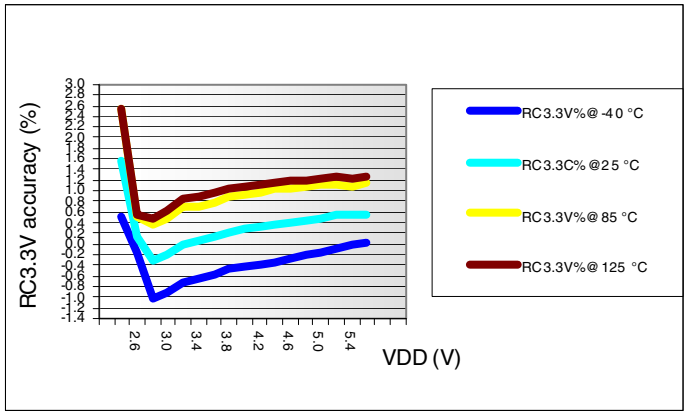

13.4 Supply current characteristics

The following current consumption specified for the ST7 functional operating modes over temperature range does not take into account the clock source current consumption. To get the total device consumption, the two current values must be added (except for Halt mode for which the clock is stopped).

13.4.1 Supply current

T_A = -40 to +125 °C unless otherwise specified.

Table 67. Supply current characteristics

Symbol	Parameter	Conditions		Typ	Max	Unit
I_{DD}	Supply current in Run mode(1)	V_{DD}=5 V	f_{CPU} = 4 MHz	2.5	4.5(2)	mA
			f_{CPU} = 8 MHz	5.0	9.5	
	Supply current in Wait mode(3)		f_{CPU} = 4 MHz	1.1	2(2)	
			f_{CPU} = 8 MHz	2	3.5	
	Supply current in Slow mode(4)		f_{CPU}/32 = 250 kHz	550	900	µA
	Supply current in Slow-wait mode(5)		f_{CPU}/32 = 250 kHz	450	750	
	Supply current in AWUFH mode(6)(7)			50	90(2)	
	Supply current in Active-halt mode			120	200	
	Supply current in Halt mode(8)		T_A = 85 °C	0.5	5	
			T_A = 125 °C	0.5	5	
I_{DD}	Supply current in Run mode(1)	V_{DD}=3 V	f_{CPU} = 4 MHz	1.4	2.5(2)	mA
	Supply current in Wait mode(3)		f_{CPU} = 4 MHz	600	900(2)	
	Supply current in Slow mode(4)		f_{CPU}/32 = 250 kHz	300	500(2)	µA
	Supply current in Slow-wait mode(5)		f_{CPU}/32 = 250 kHz	250	450(2)	
	Supply current in AWUFH mode(6)(7)			20	40(2)	
	Supply current in Active-halt mode			80	120(2)	
	Supply current in Halt mode(8)		T_A = 85 °C	0.5	5(2)	
			T_A = 125 °C	0.5	5	

1. CPU running with memory access, all I/O pins in input mode with a static value at V_{DD} or V_{SS} (no load), all peripherals in reset state; clock input (CLKIN) driven by external square wave, LVD disabled.
2. Data based on characterization, not tested in production.
3. All I/O pins in input mode with a static value at V_{DD} or V_{SS} (no load), all peripherals in reset state; clock input (CLKIN) driven by external square wave, LVD disabled.
4. Slow mode selected with f_{CPU} based on f_{OSC} divided by 32. All I/O pins in input mode with a static value at V_{DD} or V_{SS} (no load), all peripherals in reset state; clock input (CLKIN) driven by external square wave, LVD disabled.
5. Slow-wait mode selected with f_{CPU} based on f_{OSC} divided by 32. All I/O pins in input mode with a static value at V_{DD} or V_{SS} (no load), all peripherals in reset state; clock input (CLKIN) driven by external square wave, LVD disabled.
6. All I/O pins in input mode with a static value at V_{DD} or V_{SS} (no load). Data tested in production at V_{DD} max. and f_{CPU} max.
7. This consumption refers to the Halt period only and not the associated run period which is software dependent.
8. All I/O pins in output mode with a static value at V_{SS} (no load), LVD disabled. Data based on characterization results, tested in production at V_{DD} max and f_{CPU} max.

Figure 67. Typical I_{DD} in Run mode vs. f_{CPU}

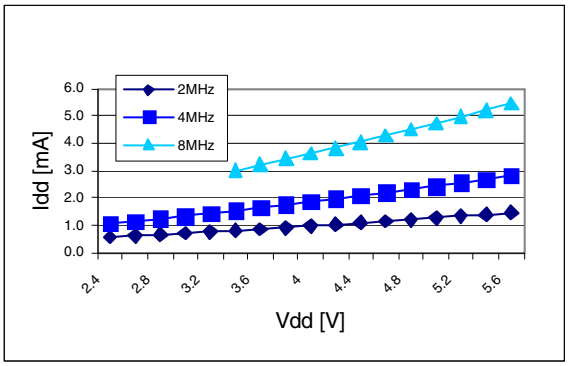

Figure 68. Typical I_{DD} in WFI vs. f_{CPU}

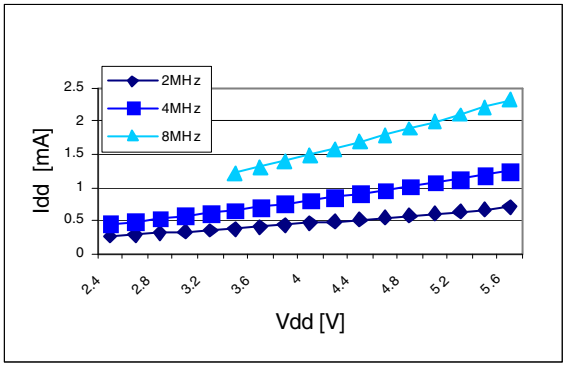

Figure 69. Typical I_{DD} in slow mode vs. f_{CPU}

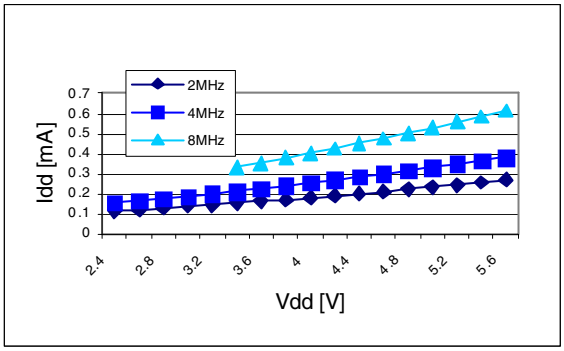

Figure 70. Typical I_{DD} in Slow-wait mode vs. f_{CPU}

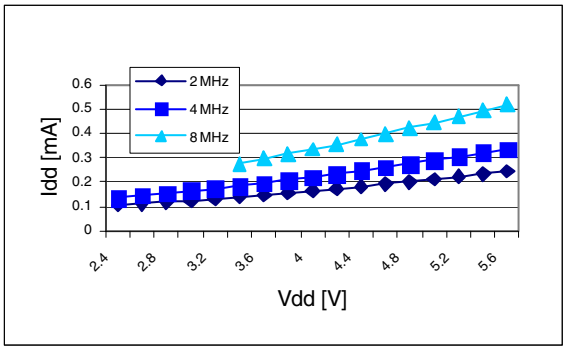

Figure 71. Typical I_{DD} vs. temperature at V_{DD} = 5 V and f_{CPU} = 8 MHz

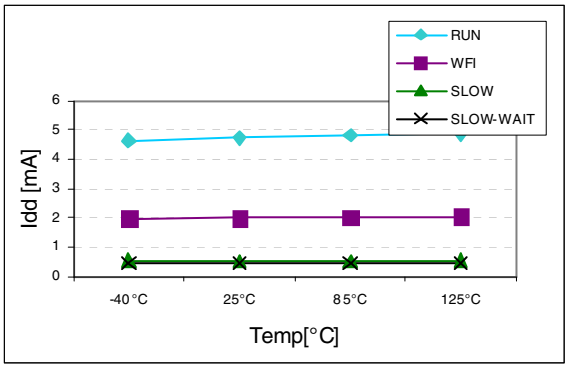

13.4.2 On-chip peripherals

Table 68. On-chip peripheral characteristics

Symbol	Parameter	Conditions		Typ	Unit
$I_{DD(AT)}$	12-bit auto-reload timer supply current(1)	f_{CPU}=4 MHz	V_{DD}=3.0 V	10	µA
		f_{CPU}=8 MHz	V_{DD}=5.0 V	50	
$I_{DD(I2C)}$	I^2C supply current(2)	f_{CPU}=4 MHz	V_{DD}=3.0 V	600	µA
		f_{CPU}=8 MHz	V_{DD}=5.0 V	1000	
$I_{DD(ADC)}$	ADC supply current when converting(3)	f_{ADC}=4 MHz	V_{DD}=3.0 V	400	µA
			V_{DD}=5.0 V	600	

1. Data based on a differential I_{DD} measurement between reset configuration (timer stopped) and a timer running in PWM mode at f_{cpu}= 8 MHz.
2. Data based on a differential I_{DD} measurement between reset configuration (I^2C disabled) and a permanent I^2C master communication at 100 kHz (data sent equal to 55h). This measurement include the pad toggling consumption (4.7 kOhm external pull-up on clock and data lines).
3. Data based on a differential I_{DD} measurement between reset configuration and continuous A/D conversions with amplifier disabled.

13.5 Communication interface characteristics

13.5.1 I^2C interface

Subject to general operating conditions for V_{DD}, f_{OSC}, and T_A unless otherwise specified.

Refer to I/O port characteristics for more details on the input/output alternate function characteristics (SDAI and SCLI). The ST7 I^2C interface meets the electrical and timing requirements of the Standard I^2C communication protocol.

T_A = -40 °C to 125 °C, unless otherwise specified.

Table 69. I^2C interface characteristics

Symbol	Parameter	Conditions	Min	Max	Unit
f_{SCL}(1)	I²C SCL frequency	f_{CPU}=4 MHz to 8 MHz, V_{DD}= 2.4 to 5.5 V		400	kHz

1. The I^2C interface will not function below the minimum clock speed of 4 MHz (see *Table 70*).

Table 70 gives the values to be written in the I2CCCR register to obtain the required I^2C SCL line frequency.

Table 70. SCL frequency (multimaster I²C interface)(1)(2)(3)

f_{SCL}	I2CCCR Value							
	f_{CPU} = 4 MHz				f_{CPU} = 8 MHz			
	V_{DD} = 3.3 V		V_{DD} = 5 V		V_{DD} = 3.3 V		V_{DD} = 5 V	
	R_P=3.3 kΩ	R_P=4.7 kΩ	R_P=3.3 kΩ	R_P=4.7 kΩ	R_P=3.3 kΩ	R_P=4.7 kΩ	R_P=3.3 kΩ	R_P=4.7 kΩ
400	NA	NA	NA	NA	84h	83h	84h	84h
300	NA	NA	NA	NA	86h	86h	86h	86h
200	84h	84h	84h	84h	8Ah	8Ah	8Ah	8Ah
100	11h	11h	11h	11h	25h	24h	25h	24h
50	25h	25h	25h	25h	4Ch	4Ch	4Dh	4Ch
20	61h	61h	61h	62h	FFh	FFh	FFh	FFh

1. R_P = External pull-up resistance, f_{SCL} = I²C speed
2. For fast mode speeds, achieved speed can have ±5% tolerance. For other speed ranges, achieved speed can have ±2% tolerance.
3. The above variations depend on the accuracy of the external components used.

13.6 Clock and timing characteristics

Subject to general operating conditions for V_{DD}, f_{OSC}, and T_A.

Table 71. General timings

Symbol	Parameter(1)	Conditions	Min	Typ(2)	Max	Unit
$t_{c(INST)}$	Instruction cycle time	f_{CPU} = 8 MHz	2	3	12	t_{CPU}
			250	375	1500	ns
$t_{v(IT)}$	Interrupt reaction time(3) $t_{v(IT)} = \Delta t_{c(INST)} + 10$	f_{CPU} = 8 MHz	10		22	t_{CPU}
			1.25		2.75	µs

1. Guaranteed by Design. Not tested in production.
2. Data based on typical application software.
3. Time measured between interrupt event and interrupt vector fetch. $\Delta t_{c(INST)}$ is the number of t_{CPU} cycles needed to finish the current instruction execution.

Table 72. External clock source characteristics

Symbol	Parameter	Conditions	Min	Typ	Max	Unit
V_{OSC1H} or V_{CLKIN_H}	OSC1/CLKIN input pin high level voltage	see *Figure 72*	$0.7xV_{DD}$		V_{DD}	V
V_{OSC1L} or V_{CLKIN_L}	OSC1/CLKIN input pin low level voltage		V_{SS}		$0.3xV_{DD}$	
$t_{w(OSC1H)}$ or $t_{w(CLKINH)}$ $t_{w(OSC1L)}$ or $t_{w(CLKINL)}$	OSC1/CLKIN high or low time(1)		15			ns
$t_{r(OSC1)}$ or $t_{r(CLKIN)}$ $t_{f(OSC1)}$ or $t_{f(CLKIN)}$	OSC1/CLKIN rise or fall time(1)				15	
I_L	OSCx/CLKIN Input leakage current	$V_{SS} \leq V_{IN} \leq V_{DD}$			±1	µA

1. Data based on design simulation and/or technology characteristics, not tested in production.

Figure 72. Typical application with an external clock source

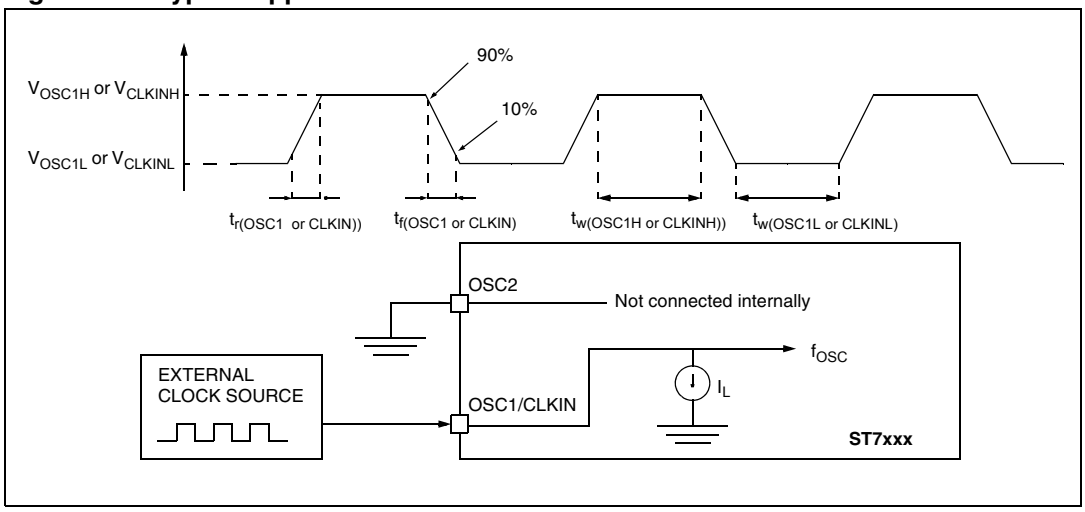

13.6.1 Auto-wakeup from Halt oscillator (AWU)

Table 73. AWU from Halt characteristics

Symbol	Parameter(1)	Conditions	Min	Typ	Max	Unit
f_{AWU}	AWU oscillator frequency		16	32	64	kHz
t_{RCSRT}	AWU oscillator startup time				50	µs

1. Guaranteed by Design. Not tested in production.

13.6.2 Crystal and ceramic resonator oscillators

The ST7 internal clock can be supplied with ten different crystal/ceramic resonator oscillators. All the information given in this paragraph are based on characterization results with specified typical external components. In the application, the resonator and the load capacitors have to be placed as close as possible to the oscillator pins in order to minimize output distortion and start-up stabilization time. Refer to the crystal/ceramic resonator manufacturer for more details (frequency, package, accuracy...).

Table 74. Crystal/ceramic resonator oscillator characteristics

Symbol	Parameter	Conditions	Min	Typ	Max	Unit
f_{CrOSC}	Crystal oscillator frequency		2		16	MHz
C_{L1} C_{L2}	Recommended load capacitance versus equivalent serial resistance of the crystal or ceramic resonator (R_S)		see table below			pF

Table 75. Typical ceramic resonators(1)

Supplier	f_{CrOSC} (MHz)	Typical ceramic resonators							Supply voltage range (V)	Temperature range (°C)
		Reference	Type	Oscillator modes	C1 (pF)	C2 (pF)	Rf	Rd (Ohm)		
Murata	2	CSTCC2M00G56Z-R0	SMD	LP or MP	(47)	(47)	open	0	2.4 to 5.5	-40 to 85
	4	CSTCR4M00G55Z-R0	SMD	MP or MS	(39)	(39)	open	0		
		CSTLS4M00G56Z-B0	LEAD	MP or MS	(47)	(47)	open	0		
	8	CSTCE8M00G52Z-R0	SMD	MS or HS	(10)	(10)	open	0		
		CSTLS8M00G53Z-B0	LEAD	MS or HS	(15)	(15)	open	0		
	16	CSTCE16M0V51Z-R0	SMD	HS	(5)	(5)	open	0	3.3 to 5.5	
		CSTLS16M0X53Z-B0	LEAD	HS	(15)	(15)	47k	0		

1. ( ) means load capacitor built in resonator.
Resonator characteristics given by the ceramic resonator manufacturer.
SMD = [-R0: plastic tape package Ø = 180 mm), -B0: Bulk]
LEAD = [-B0: bulk]
For more information on these resonators, please consult www.murata.com

Figure 73. Typical application with a crystal or ceramic resonator

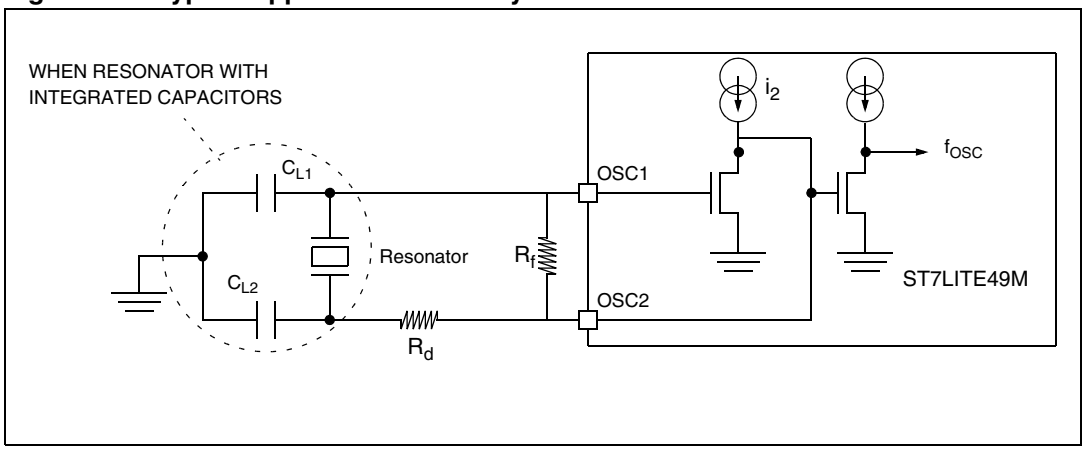

13.7 Memory characteristics

T_A = -40 °C to 125 °C, unless otherwise specified.

Table 76. RAM and hardware registers characteristics

Symbol	Parameter	Conditions	Min	Typ	Max	Unit
V_{RM}	Data retention mode(1)	Halt mode (or reset)	1.6			V

1. Minimum V_{DD} supply voltage without losing data stored in RAM (in Halt mode or under reset) or in hardware registers (only in Halt mode). Guaranteed by construction, not tested in production.

Table 77. Flash program memory characteristics

Symbol	Parameter	Conditions	Min	Typ	Max	Unit
V_{DD}	Operating voltage for Flash write/erase	Refer to operating range of V_{DD} with T_A, *Section 13.3.1 on page 142*	2.4		5.5	V
t_{prog}	Programming time for 1~32 bytes(1)	T_A=-40 to +125 °C		5	10	ms
	Programming time for 4 kbytes	T_A=+25 °C		0.64	1.28	s
t_{RET}	Data retention(2)	T_A=+55 °C(3)	20			years
N_{RW}	Write erase cycles	T_A=+25 °C			10k	cycles
I_{DD}	Supply current(4)	Read / Write / Erase modes f_{CPU} = 8 MHz, V_{DD} = 5.5 V			2.6	mA
		No Read/No Write mode			100	µA
		Power down mode / Halt		0	0.1	µA

1. Up to 32 bytes can be programmed at a time.
2. Data based on reliability test results and monitored in production.
3. The data retention time increases when the T_A decreases.
4. Guaranteed by Design. Not tested in production.

Table 78. Data EEPROM memory characteristics

Symbol	Parameter	Conditions	Min	Typ	Max	Unit
V_{DD}	Operating voltage for EEPROM Write/Erase	Refer to operating range of V_{DD} with T_A, *Section 13.3.1 on page 142*	2.4		5.5	V
t_{prog}	Programming time for 1~32 bytes	T_A=-40 to +125 °C		5	10	ms
t_{ret}	Data retention(1)	T_A=+55 °C(2)	20			years
N_{RW}	Write erase cycles	T_A=+25 °C			300k	cycles

1. Data based on reliability test results and monitored in production.
2. The data retention time increases when the T_A decreases.

13.8 EMC (electromagnetic compatibility) characteristics

Susceptibility tests are performed on a sample basis during product characterization.

13.8.1 Functional EMS (electromagnetic susceptibility)

Based on a simple running application on the product (toggling two LEDs through I/O ports), the product is stressed by two electromagnetic events until a failure occurs (indicated by the LEDs).

- **ESD**: Electrostatic discharge (positive and negative) is applied on all pins of the device until a functional disturbance occurs. This test conforms with the IEC 1000-4-2 standard.
- **FTB**: A burst of fast transient voltage (positive and negative) is applied to V_{DD} and V_{SS} through a 100 pF capacitor, until a functional disturbance occurs. This test conforms with the IEC 1000-4-4 standard.

A device reset allows normal operations to be resumed. The test results are given in the table below based on the EMS levels and classes defined in application note AN1709.

Designing hardened software to avoid noise problems

EMC characterization and optimization are performed at component level with a typical application environment and simplified MCU software. It should be noted that good EMC performance is highly dependent on the user application and the software in particular.

Therefore it is recommended that the user applies EMC software optimization and prequalification tests in relation with the EMC level requested for his application.

- Software recommendations

  The software flowchart must include the management of runaway conditions such as:
  - Corrupted program counter
  - Unexpected reset
  - Critical data corruption (control registers...)
- Prequalification trials

  Most of the common failures (unexpected reset and program counter corruption) can be reproduced by manually forcing a low state on the $\overline{RESET}$ pin or the Oscillator pins for 1 second.

  To complete these trials, ESD stress can be applied directly on the device, over the range of specification values. When unexpected behavior is detected, the software can be hardened to prevent unrecoverable errors occurring (see application note AN1015).

Table 79. EMS test results

Symbol	Parameter	Conditions	Level/ Class
V_{FESD}	Voltage limits to be applied on any I/O pin to induce a functional disturbance	V_{DD}=5 V, T_A=+25 °C, f_{OSC}=8 MHz conforms to IEC 1000-4-2	2B
V_{FFTB}	Fast transient voltage burst limits to be applied through 100 pF on V_{DD} and V_{SS} pins to induce a functional disturbance	V_{DD}=5 V, T_A=+25 °C, f_{OSC}=8 MHz conforms to IEC 1000-4-4	3B

13.8.2 EMI (electromagnetic interference)

Based on a simple application running on the product (toggling two LEDs through the I/O ports), the product is monitored in terms of emission. This emission test is in line with the norm SAE J 1752/3 which specifies the board and the loading of each pin.

Table 80. EMI emissions

Symbol	Parameter	Conditions	Monitored frequency band	Max vs. [f_{OSC}/f_{CPU}]		Unit
				8/4MHz	16/8MHz	
S_{EMI}	Peak level	V_{DD}=5 V, T_A = +25 °C, conforming to SAE J 1752/3	0.1 MHz to 30 MHz	28	32	dBµV
			30 MHz to 130 MHz	31	34	
			130 MHz to 1 GHz	18	26	
			SAE EMI Level	3	3.5	-

13.8.3 Absolute maximum ratings (electrical sensitivity)

Based on two different tests (ESD and LU) using specific measurement methods, the product is stressed in order to determine its performance in terms of electrical sensitivity.

Electrostatic discharge (ESD)

Electrostatic discharges (a positive then a negative pulse separated by 1 second) are applied to the pins of each sample according to each pin combination. The sample size depends on the number of supply pins in the device (3 parts*(n+1) supply pin). Two models can be simulated: Human body model and Machine model. This test conforms to the JESD22-A114A/A115A standard. For more details, refer to the application note AN1181.

Table 81. ESD absolute maximum ratings

Symbol	Ratings	Conditions	Maximum value(1)	Unit
$V_{ESD(HBM)}$	Electrostatic discharge voltage (Human body model)	T_A=+25 °C	4000	V
$V_{ESD(CDM)}$	Electrostatic discharge voltage (Charge device model)	T_A=+25 °C	500	

1. Data based on characterization results, not tested in production.

Static latch-up (LU)

Two complementary static tests are required on six parts to assess the latch-up performance.

- A supply overvoltage is applied to each power supply pin
- A current injection is applied to each input, output and configurable I/O pin.

These tests are compliant with the EIA/JESD 78 IC latch-up standard.

Table 82. Electrical sensitivities

Symbol	Parameter	Conditions	Class
LU	Static latch-up class	T_A = +125 °C	A

13.9 I/O port pin characteristics

13.9.1 General characteristics

Subject to general operating conditions for V_{DD}, f_{OSC}, and T_A unless otherwise specified.

Table 83. General characteristics

Symbol	Parameter	Conditions		Min	Typ	Max	Unit
V_{IL}	Input low level voltage			V_{SS} - 0.3		$0.3V_{DD}$	V
V_{IH}	Input high level voltage			$0.7V_{DD}$		V_{DD}+0.3	
V_{hys}	Schmitt trigger voltage hysteresis(1)				400		mV
I_L	Input leakage current	$V_{SS} \leq V_{IN} \leq V_{DD}$				±1	µA
I_S	Static current consumption induced by each floating input pin(2)	Floating input mode			400		
R_{PU}	Weak pull-up equivalent resistor(3)	$V_{IN}=V_{SS}$	V_{DD}= 5 V	100	120	140	kΩ
			V_{DD}= 3 V		300(1)		
C_{IO}	I/O pin capacitance				5		pF
$t_{f(IO)out}$	Output high to low level fall time(1)	C_L= 50 pF Between 10% and 90%			25		ns
$t_{r(IO)out}$	Output low to high level rise time(1)				25		
$t_{w(IT)in}$	External interrupt pulse time(4)			1			t_{CPU}

1. Data based on validation/design results.
2. Configuration not recommended, all unused pins must be kept at a fixed voltage: using the output mode of the I/O for example or an external pull-up or pull-down resistor (see *Figure 74*). Static peak current value taken at a fixed V_{IN} value, based on design simulation and technology characteristics, not tested in production. This value depends on V_{DD} and temperature values.
3. The R_{PU} pull-up equivalent resistor is based on a resistive transistor.
4. To generate an external interrupt, a minimum pulse width has to be applied on an I/O port pin configured as an external interrupt source.

Figure 74. Two typical applications with unused I/O pin

1. During normal operation the ICCCLK pin must be pulled-up, internally or externally (external pull-up of 10 kΩ mandatory in noisy environment). This is to avoid entering ICC mode unexpectedly during a reset.
2. I/O can be left unconnected if it is configured as output (0 or 1) by the software. This has the advantage of greater EMC robustness and lower cost.

Figure 75. R_{pu} resistance versus voltage at four different temperatures

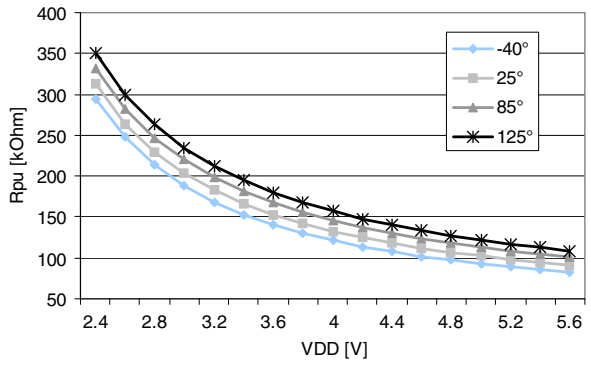

Figure 76. I_{pu} current versus voltage at four different temperatures

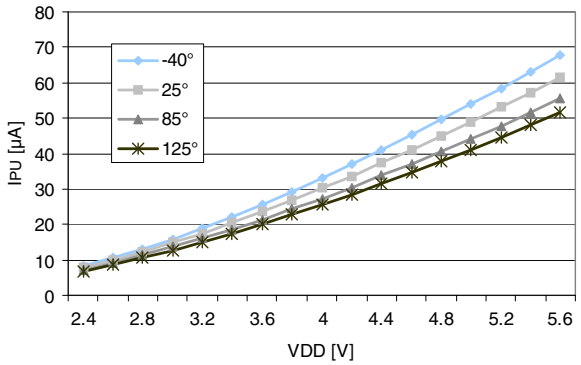

13.9.2 Output driving current

Subject to general operating conditions for V_{DD}, f_{CPU}, and T_A unless otherwise specified.

Table 84. Output driving current characteristics

Symbol	Parameter	Conditions		Min	Max	Unit
V_{OL} (1)	Output low level voltage for a standard I/O pin when 8 pins are sunk at same time (see *Figure 79*)	V_{DD} = 5 V	I_{IO}=+5 mA, T_A≤125 °C		1.0	V
			I_{IO}=+2 mA, T_A≤ 125 °C		0.4	
	Output low level voltage for a high sink I/O pin when 4 pins are sunk at same time (see *Figure 82*)		I_{IO}=+20 mA, T_A≤125 °C		1.3	
			I_{IO}=+8 mA T_A≤125 °C		0.75	
V_{OH} (2)	Output high level voltage for an I/O pin when 4 pins are sourced at same time (see *Figure 90*)		I_{IO}=-5 mA, T_A≤125 °C	V_{DD}-1.5		
			I_{IO}=-2 mA T_A≤125 °C	V_{DD}-0.8		
V_{OL} (1)(3)	Output low level voltage for a standard I/O pin when 8 pins are sunk at same time (see *Figure 78* and *Figure 81*)	V_{DD} = 3 V	I_{IO}=+2 mA T_A≤125 °C		0.5	
	Output low level voltage for a high sink I/O pin when 4 pins are sunk at same time		I_{IO}=+8 mA T_A≤125 °C		0.5	
V_{OH} (2)(3)	Output high level voltage for an I/O pin when 4 pins are sourced at same time (*Figure 89*)		I_{IO}=-2 mA T_A≤125 °C	V_{DD}-0.8		
V_{OL} (1)(3)	Output low level voltage for a standard I/O pin when 8 pins are sunk at same time (see *Figure 77*)	V_{DD} = 2.4 V	I_{IO}=+2 mA T_A≤125 °C		0.6	
	Output low level voltage for a high sink I/O pin when 4 pins are sunk at same time (see *Figure 80*)		I_{IO}=+8 mA T_A≤125 °C		0.6	
V_{OH} (2)(3)	Output high level voltage for an I/O pin when 4 pins are sourced at same time (see *Figure 88*)		I_{IO}=-2 mA T_A≤125 °C	V_{DD}-0.9		

1. The I_{IO} current sunk must always respect the absolute maximum rating specified in *Section Table 59.* and the sum of I_{IO} (I/O ports and control pins) must not exceed I_{VSS}.
2. The I_{IO} current sourced must always respect the absolute maximum rating specified in *Section Table 59.* and the sum of I_{IO} (I/O ports and control pins) must not exceed I_{VDD}.
3. Not tested in production, based on characterization results.

Figure 77. Typical V_{OL} at V_{DD} = 2.4 V (standard)

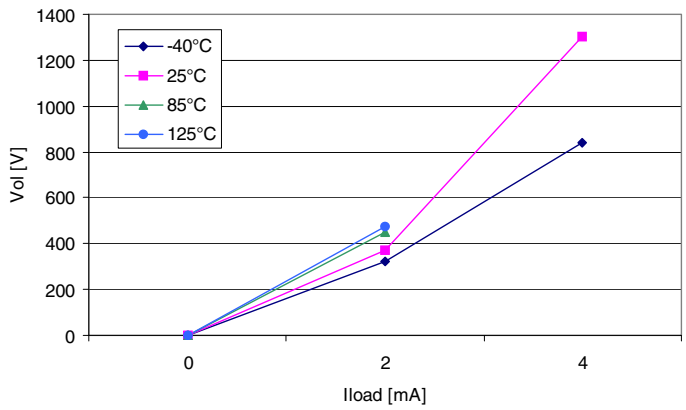

Figure 78. Typical V_{OL} at V_{DD} = 3 V (standard)

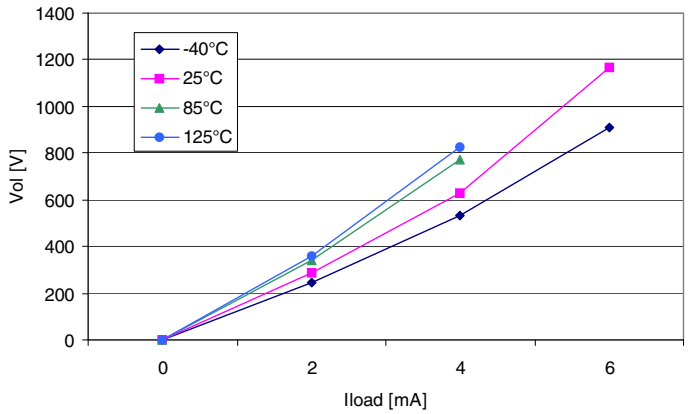

Figure 79. Typical V_{OL} at V_{DD} = 5 V (standard)

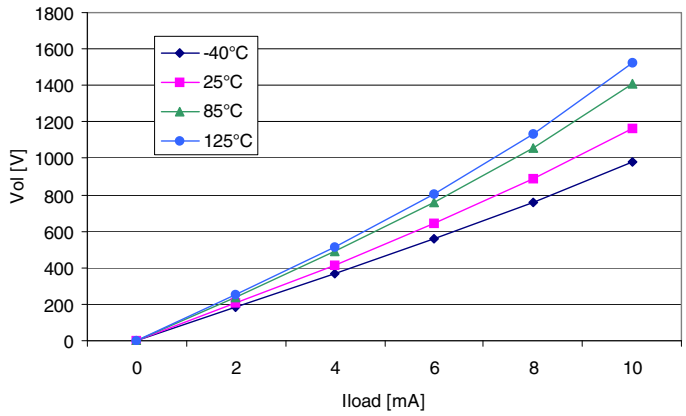

Figure 80. Typical V_{OL} at V_{DD} = 2.4 V (high sink)

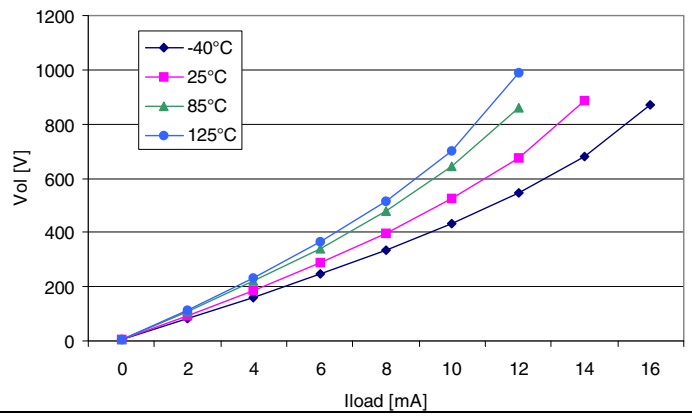

Figure 81. Typical V_{OL} at V_{DD} = 3 V (high sink)

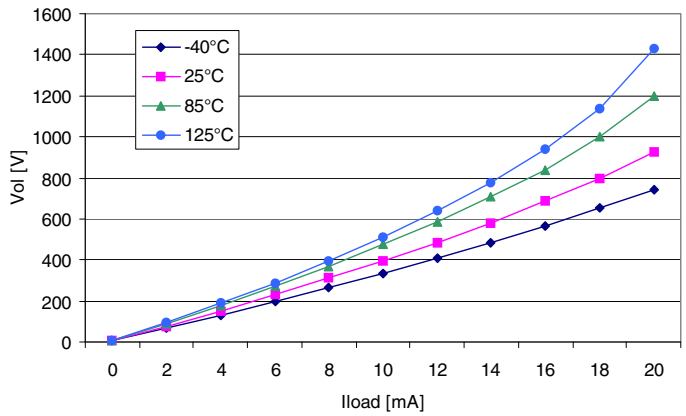

Figure 82. Typical V_{OL} at V_{DD} = 5 V (high sink)

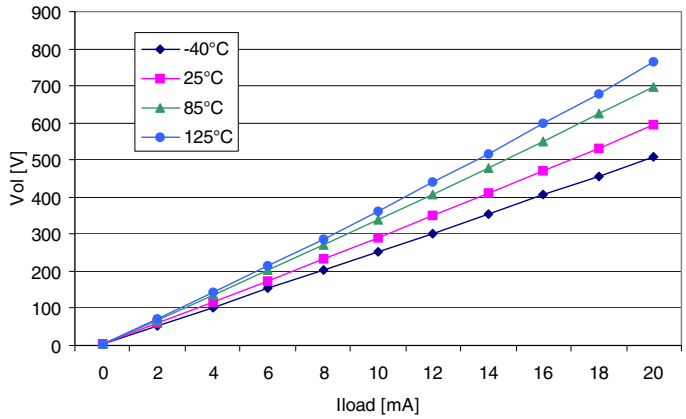

Figure 83. Typical V_{OL} vs. V_{DD} at I_{IO} = 2 mA (standard)

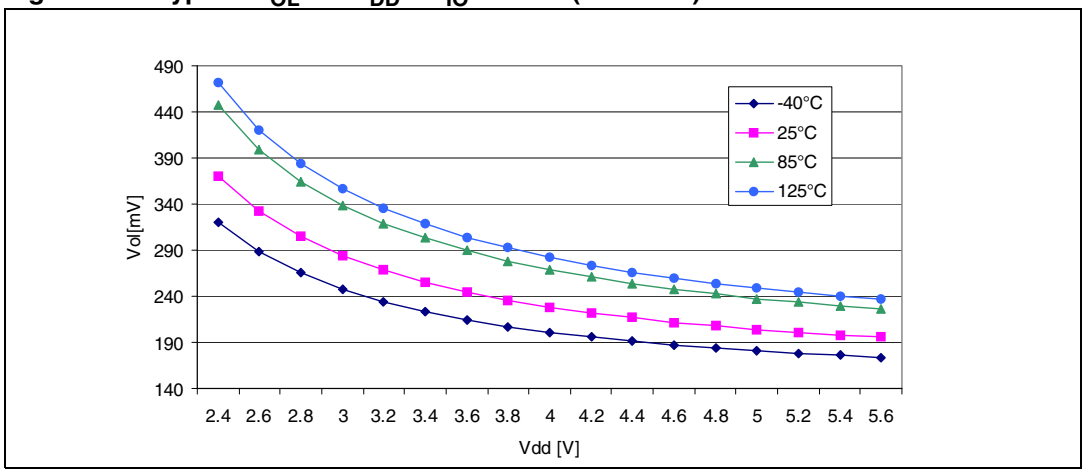

Figure 84. Typical V_{OL} vs. V_{DD} at I_{IO} = 4 mA (standard)

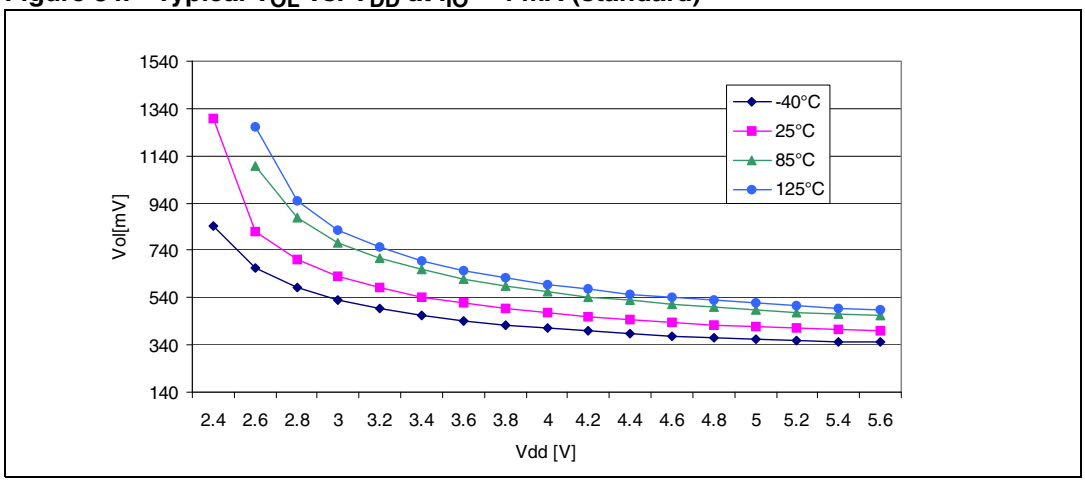

Figure 85. Typical V_{OL} vs V_{DD} at I_{IO} = 2 mA (high sink)

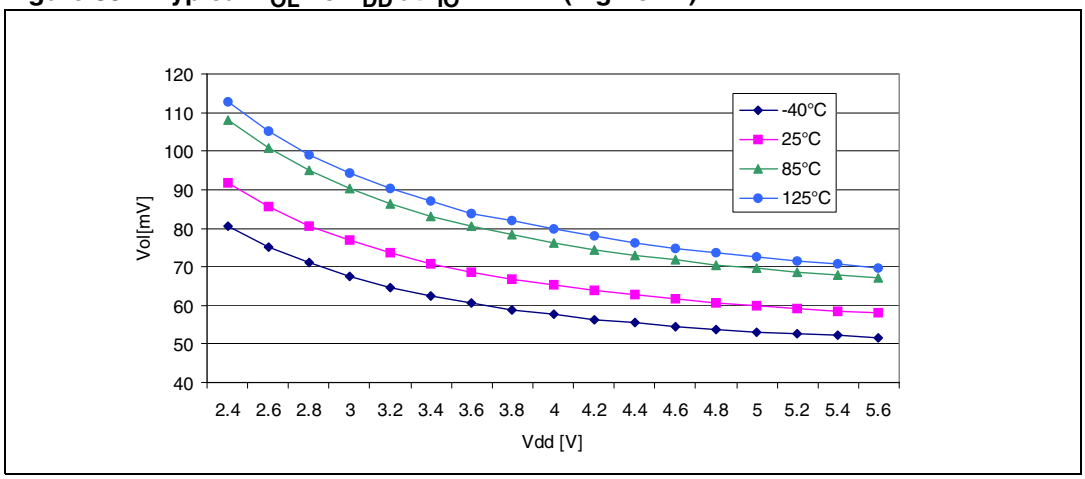

Figure 86. Typical V_{OL} vs V_{DD} at $_{IO}$ = 8 mA (high sink)

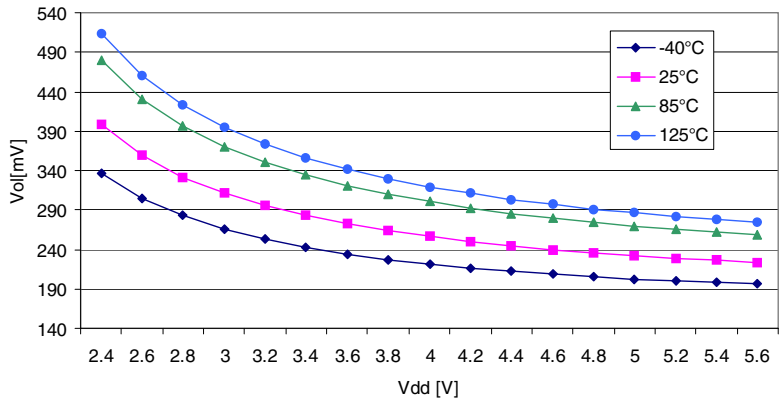

Figure 87. Typical V_{OL} vs V_{DD} at I_{IO} = 12 mA (high sink)

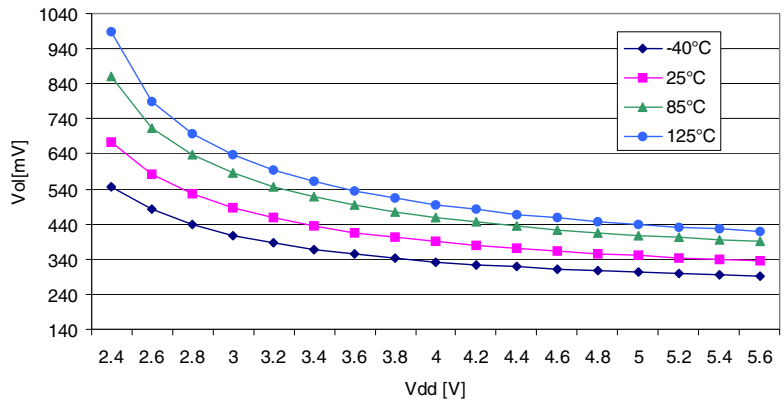

Figure 88. Typical V_{DD}-V_{OH} vs. I_{IO} at V_{DD} = 2.4 V (high sink)

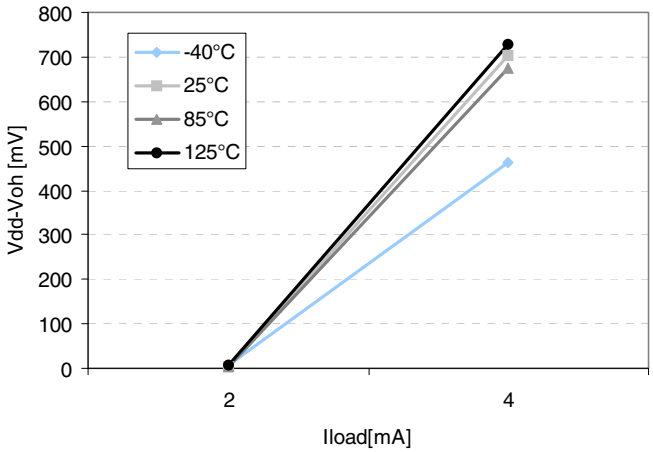

Figure 89. Typical V_{DD}-V_{OH} vs. I_{IO} at V_{DD} = 3 V (high sink)

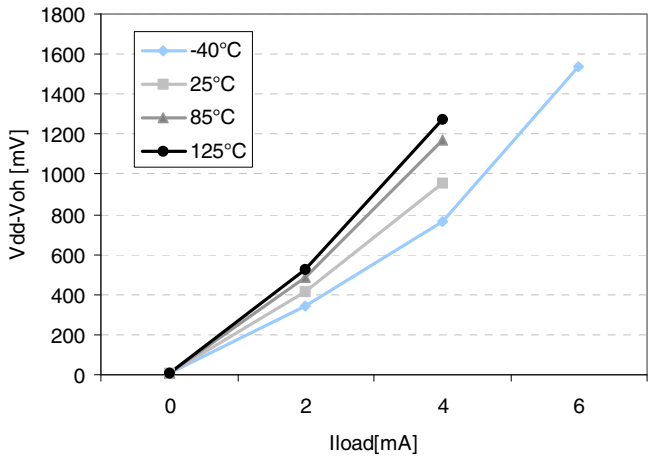

Figure 90. Typical V_{DD}-V_{OH} vs. I_{IO} at V_{DD} = 5 V (high sink)

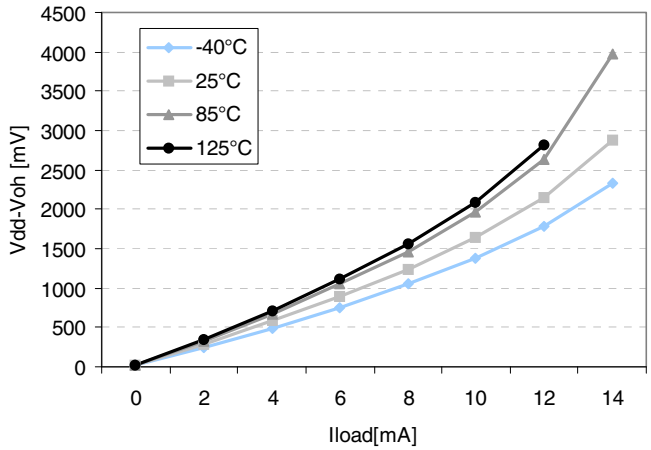

Figure 91. Typical V_{DD}-V_{OH} vs. I_{IO} at V_{DD} = 2.4 V (standard)

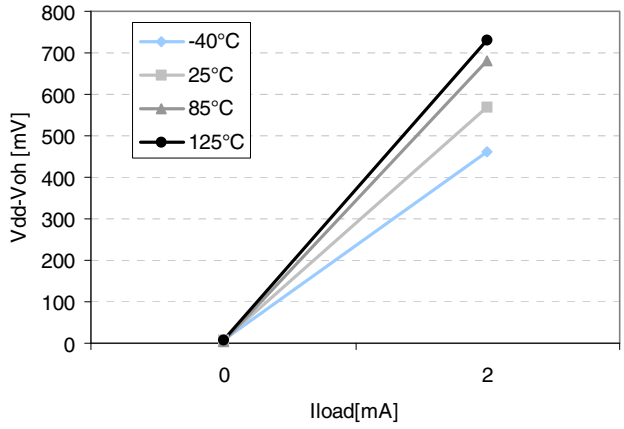

Figure 92. Typical V_{DD}-V_{OH} vs. I_{IO} at V_{DD} = 3 V (standard)

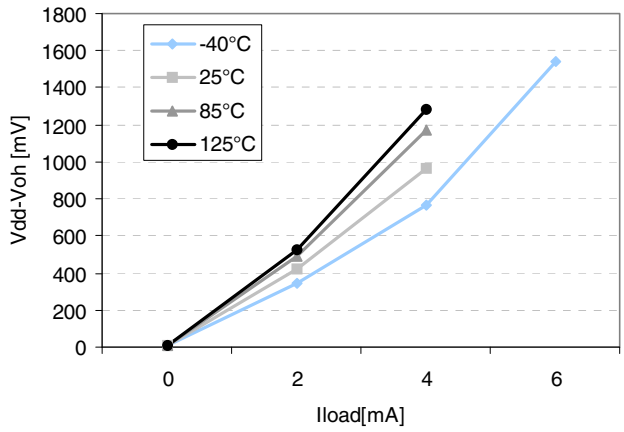

Figure 93. Typical V_{DD}-V_{OH} vs. I_{IO} at V_{DD} = 5 V (standard)

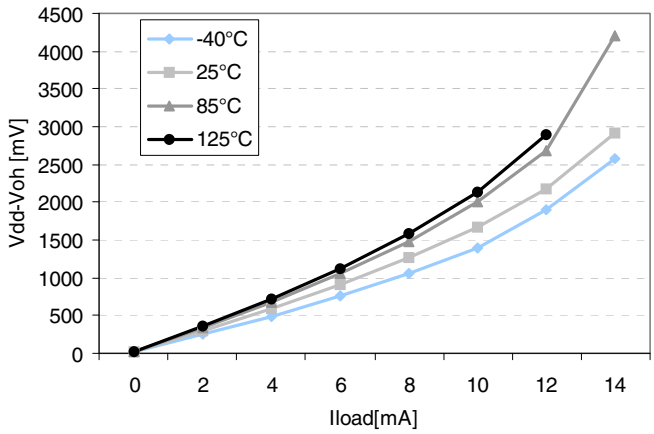

Figure 94. Typical V_{DD}-V_{OH} vs. V_{DD} at I_{IO} = 2 mA (high sink)

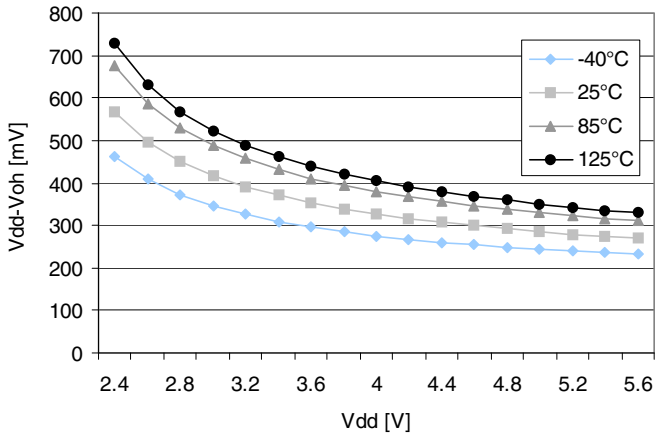

Figure 95. Typical V_{DD}-V_{OH} vs. V_{DD} at I_{IO} = 4 mA (high sink)

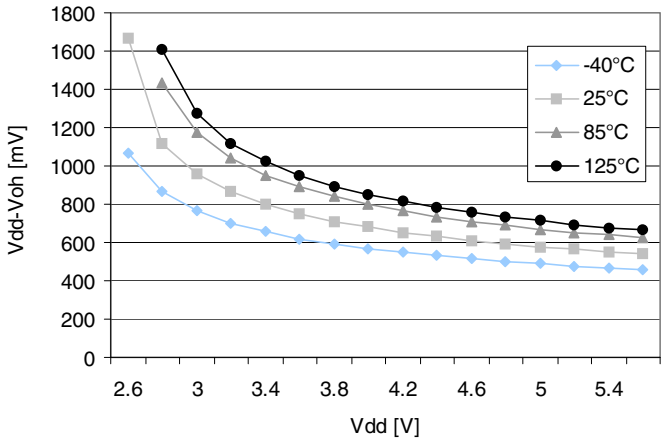

13.10 Control pin characteristics

13.10.1 Asynchronous $\overline{RESET}$ pin

T_A = -40 to 125 °C, unless otherwise specified.

Table 85. Asynchronous $\overline{RESET}$ pin characteristics

Symbol	Parameter	Conditions		Min	Typ	Max	Unit
V_{IL}	Input low level voltage			V_{SS} - 0.3		$0.3V_{DD}$	V
V_{IH}	Input high level voltage			$0.7V_{DD}$		V_{DD}+0.3	
V_{hys}	Schmitt trigger voltage hysteresis(1)				2		V
V_{OL}	Output low level voltage (2)	V_{DD}= 5 V	I_{IO} = +2 mA		200		mV
R_{ON}	Pull-up equivalent resistor(3)	V_{IN}=V_{SS}	V_{DD} = 5 V	30	50	70	kΩ
			V_{DD} = 3 V		90(1)		
$t_{w(RSTL)out}$	Generated reset pulse duration	Internal reset sources			90(1)		µs
$t_{h(RSTL)in}$	External reset pulse hold time(4)			20			µs
$t_{g(RSTL)in}$	Filtered glitch duration				200		ns

1. Data based on characterization results, not tested in production
2. The I_{IO} current sunk must always respect the absolute maximum rating specified in *Section Table 59. on page 141* and the sum of I_{IO} (I/O ports and control pins) must not exceed I_{VSS}.
3. The R_{ON} pull-up equivalent resistor is based on a resistive transistor. Specified for voltages on $\overline{RESET}$ pin between V_{ILmax} and V_{DD}
4. To guarantee the reset of the device, a minimum pulse has to be applied to the $\overline{RESET}$ pin. All short pulses applied on $\overline{RESET}$ pin with a duration below $t_{h(RSTL)in}$ can be ignored.

Figure 96. $\overline{\text{RESET}}$ pin protection when LVD is enabled

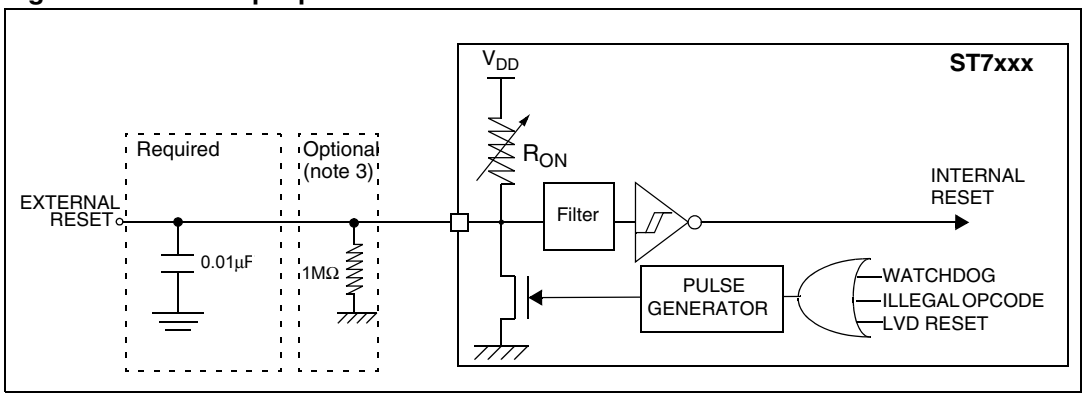

1. The reset network protects the device against parasitic resets. The output of the external reset circuit must have an open-drain output to drive the ST7 reset pad. Otherwise the device can be damaged when the ST7 generates an internal reset (LVD or watchdog). Whatever the reset source is (internal or external), the user must ensure that the level on the $\overline{\text{RESET}}$ pin can go below the V_{IL} max. level specified in *Section 13.10.1 on page 168*. Otherwise the reset will not be taken into account internally. Because the reset circuit is designed to allow the internal reset to be output in the $\overline{\text{RESET}}$ pin, the user must ensure that the current sunk on the $\overline{\text{RESET}}$ pin is less than the absolute maximum value specified for $I_{INJ(RESET)}$ in *Section Table 59. on page 141*.
2. When the LVD is enabled, it is recommended not to connect a pull-up resistor or capacitor. A 10nF pull-down capacitor is required to filter noise on the reset line.
3. In case a capacitive power supply is used, it is recommended to connect a 1 MΩ pull-down resistor to the $\overline{\text{RESET}}$ pin to discharge any residual voltage induced by the capacitive effect of the power supply (this will add 5µA to the power consumption of the MCU).

Tips when using the LVD

- Check that all recommendations related to ICCCLK and reset circuit have been applied (see caution in *Section 4.4: ICC interface on page 21* and notes above).
- Check that the power supply is properly decoupled (100 nF + 10 µF close to the MCU). Refer to AN1709 and AN2017. If this cannot be done, it is recommended to put a 100 nF + 1 MΩ pull-down on the $\overline{\text{RESET}}$ pin.
- The capacitors connected on the $\overline{\text{RESET}}$ pin and also the power supply are key to avoid any start-up marginality. In most cases, steps 1 and 2 above are sufficient for a robust solution. Otherwise: replace 10 nF pull-down on the $\overline{\text{RESET}}$ pin with a 5 µF to 20 µF capacitor."

Figure 97. $\overline{\text{RESET}}$ pin protection when LVD is disabled

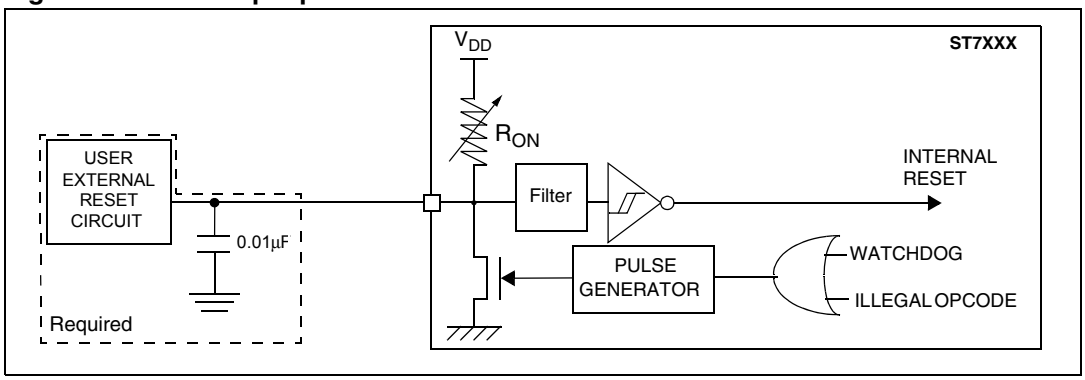

1. The reset network protects the device against parasitic resets.
   The output of the external reset circuit must have an open-drain output to drive the ST7 reset pad. Otherwise the device can be damaged when the ST7 generates an internal reset (LVD or watchdog).
   Whatever the reset source is (internal or external), the user must ensure that the level on the $\overline{\text{RESET}}$ pin can go below the V_{IL} max. level specified in *Section 13.10.1 on page 168*. Otherwise the reset will not be taken into account internally.
   Because the reset circuit is designed to allow the internal reset to be output in the $\overline{\text{RESET}}$ pin, the user must ensure that the current sunk on the $\overline{\text{RESET}}$ pin is less than the absolute maximum value specified for $I_{INJ(RESET)}$ in *Section Table 59. on page 141*.
2. Please refer to *Section 12.2.1 on page 136* for more details on illegal opcode reset conditions.

13.11 10-bit ADC characteristics

Subject to general operating condition for V_{DD}, f_{OSC}, and T_A unless otherwise specified.

Table 86. ADC characteristics

Symbol	Parameter	Conditions	Min	Typ(1)	Max	Unit
f_{ADC}	ADC clock frequency(2)				4	MHz
V_{AIN}	Conversion voltage range		V_{SSA}		V_{DDA}	V
R_{AIN}	External input resistor	V_{DD} = 5 V, f_{ADC} = 4 MHz			8(3)	kΩ
		V_{DD} = 3.3 V, f_{ADC} = 4 MHz			7(3)	
		2.7 V ≤V_{DD} ≤5.5 V, f_{ADC} = 2 MHz			10(3)	
		2.4 V ≤V_{DD} ≤2.7 V, f_{ADC} = 1 MHz			20(3)	
C_{ADC}	Internal sample and hold capacitor			6		pF
t_{STAB}	Stabilization time after ADC enable	f_{CPU} = 8 MHz, f_{ADC} = 4 MHz		0(4)		µs
t_{ADC}	Conversion time (Sample+Hold)			3.5		
	- Sample capacitor loading time - Hold conversion time			4 10		$1/f_{ADC}$

1. Unless otherwise specified, typical data are based on T_A = 25 °C and V_{DD}-V_{SS} = 5 V. They are given only as design guidelines and are not tested.
2. The maximum ADC clock frequency allowed within V_{DD} = 2.4 V to 2.7 V operating range is 1 MHz.
3. Any added external serial resistor will downgrade the ADC accuracy (especially for resistance greater than the maximum value). Data guaranteed by Design, not tested in production.
4. The stabilization time of the A/D converter is masked by the first t_{LOAD}. The first conversion after the enable is then always valid.

Figure 98. Typical application with ADC

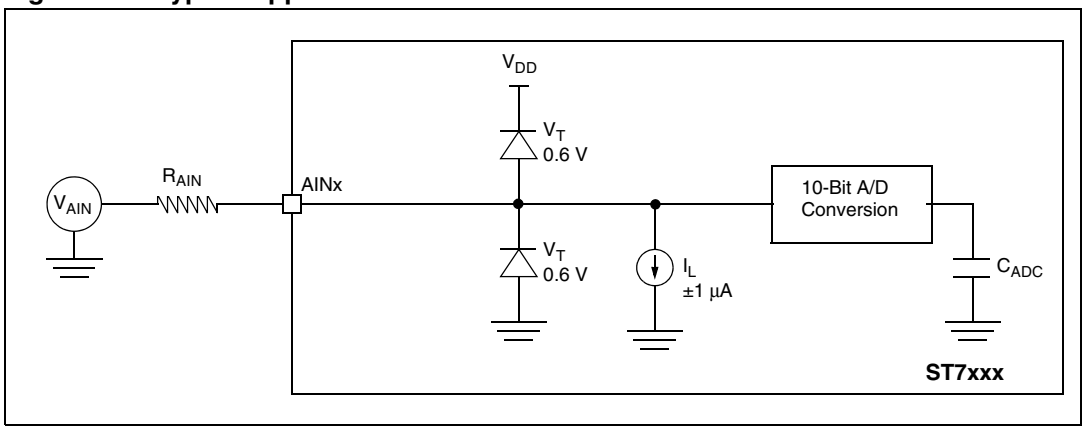

Table 87. ADC accuracy with V_{DD} = 3.3 to 5.5 V

Symbol (1)	Parameter	Conditions	Typ	Max	Unit
$\|E_T\|$	Total unadjusted error	f_{CPU}=8 MHz, f_{ADC}=4 MHz(1)	2.0	5.0	LSB
$\|E_O\|$	Offset error		0.9	2.5	
$\|E_G\|$	Gain error		1.0	1.5	
$\|E_D\|$	Differential linearity error		1.2	3.5	
$\|E_L\|$	Integral linearity error		1.1	4.5	

1. Data based on characterization results over the whole temperature range.

Table 88. ADC accuracy with V_{DD} = 2.7 to 3.3 V

Symbol (1)	Parameter	Conditions	Typ	Max	Unit
$\|E_T\|$	Total unadjusted error	f_{CPU}= 4 MHz, f_{ADC}= 2 MHz(1)	1.9	3.0	LSB
$\|E_O\|$	Offset error		0.9	1.5	
$\|E_G\|$	Gain error		0.8	1.4	
$\|E_D\|$	Differential linearity error		1.4	2.5	
$\|E_L\|$	Integral linearity error		1.1	2.5	

1. Data based on characterization results over the whole temperature range.

Table 89. ADC accuracy with V_{DD} = 2.4 to 2.7 V

Symbol (1)	Parameter	Conditions	Typ	Max	Unit
$\|E_T\|$	Total unadjusted error	f_{CPU}= 2 MHz, f_{ADC}=1 MHz(1)	2.5	3.5	LSB
$\|E_O\|$	Offset error		1.1	1.5	
$\|E_G\|$	Gain error		0.5	1.5	
$\|E_D\|$	Differential linearity error		1.1	2.5	
$\|E_L\|$	Integral linearity error		1.2	2.5	

1. Data based on characterization results at ambient temperature and above.

Figure 99. ADC accuracy characteristics

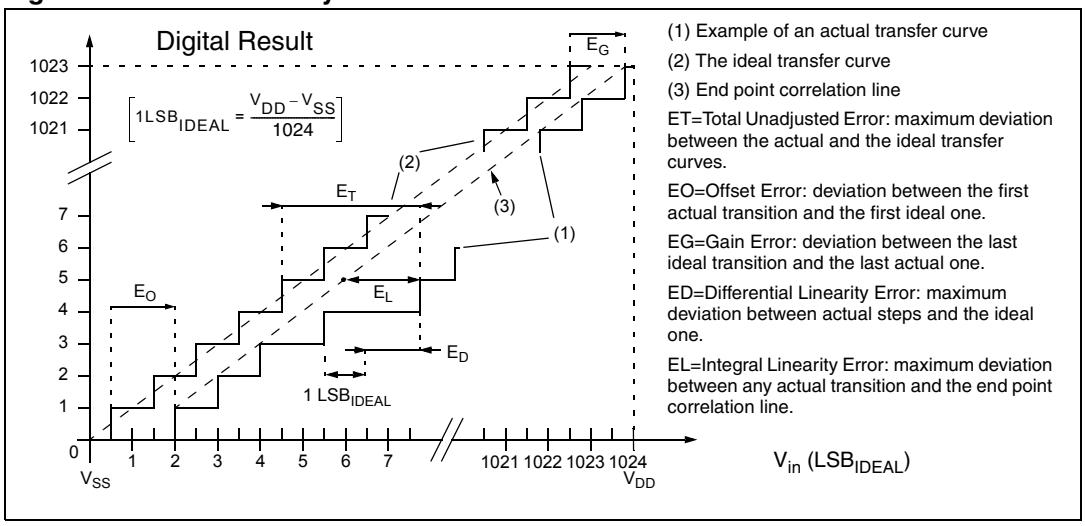

14 Device configuration and ordering information

This device is available for production in user programmable version (Flash).

ST7LITE49M XFlash devices are shipped to customers with a default program memory content (FFh).

14.1 Option bytes

The two option bytes allow the hardware configuration of the microcontroller to be selected. The option bytes can be accessed only in programming mode (for example using a standard ST7 programming tool).

14.1.1 Option byte 1

Bits 7:6 = **CKSEL[1:0]** *Start-up clock selection.*

These bits are used to select the startup frequency. By default, the internal RC is selected.

Table 90. Startup clock selection

Configuration	CKSEL1	CKSEL0
Internal RC as startup clock	0	0
AWU RC as a startup clock	0	1
External crystal/ceramic resonator	1	0
External clock	1	1

Bits 5:4 = Reserved, must always be 1.

Bits 3:2 = **LVD[1:0]** *Low voltage detection selection.*

These option bits enable the low voltage detection block (LVD) with a selected threshold as shown in *Table 91*.

Table 91. LVD threshold configuration

Configuration	VD1	VD0
LVD off (default value)	1	1
Highest voltage threshold	1	0
Medium voltage threshold	0	1
Lowest voltage threshold	0	0

Bit 1 = **WDG SW** *Hardware or software watchdog*

This option bit selects the watchdog type.
0: Hardware (watchdog always enabled)
1: Software (watchdog to be enabled by software)

Bit 0 = **WDG HALT** *Watchdog reset on Halt*

This option bit determines if a reset is generated when entering Halt mode while the Watchdog is active.
0: No reset generation when entering Halt mode
1: Reset generation when entering Halt mode

14.1.2 Option byte 0

OPT 7 = **AWUCK** *Auto-wakeup clock selection*

0: 32-kHz oscillator (VLP) selected as AWU clock

1: AWU RC oscillator selected as AWU clock.

Note: If this bit is reset, OSCRANGE[2:0] must be set to 100.

OPT6:4 = **OSCRANGE[2:0]** *Oscillator range*

When the internal RC oscillator is not selected (CKSEL1=1), these option bits (and CKSEL0) select the range of the resonator oscillator current source or the external clock source.

Table 92. Selection of the resonator oscillator range

			OSCRANGE(1)		
			2	**1**	**0**
Typ. frequency range with Resonator	LP	1~2 MHz	0	0	0
	MP	2~4 MHz	0	0	1
	MS	4~8 MHz	0	1	0
	HS	8~16 MHz	0	1	1
	VLP	32.768 kHz	1	0	0
External Clock on OSC1/CLKIN			1	0	1
Reserved			1	1	0
External clock on PB1			1	1	1

1. When the internal RC oscillator is selected, the CLKSEL option bits must be kept at their default value in order to select the 256 clock cycle delay (see *Section 7.3*).

OPT 3:2 = **SEC[1:0]** *Sector 0 size definition*

These option bits indicate the size of sector 0 according to *Table 93*.

Table 93. Configuration of sector size

Sector 0 Size	SEC1	SEC0
0.5k	0	0
1k	0	1
2k	1	0
4k	1	1

Bit 1 = **FMP_R** *Read-out protection*

Read-out protection, when selected provides a protection against program memory content extraction and against write access to Flash memory. Erasing the option bytes when the FMP_R option is selected will cause the whole memory to be erased first, and the device can be reprogrammed. Refer to *Section 4.5 on page 23* and the ST7 Flash Programming Reference Manual for more details.

0: Read-out protection off

1: Read-out protection on

Bit 0 = **FMP_W** *Flash write protection*

This option indicates if the Flash program memory is write protected.

0: Write protection off

1: Write protection on

Warning: When the Flash write protection is selected, the program memory (and the option bit itself) can never be erased or programmed again.

	Option byte 0								Option byte 1							
	7							0	7							0
	AWU CK	OSCRANGE[2:0]			SEC 1	SEC 0	FMP R	FMP W	CK SEL1	CK SEL0	Res	Res	LVD1	LVD0	WDG SW	WDG HALT
Default value	1	1	1	1	1	1	0	0	0	0	1	1	1	1	1	1

14.2 Device ordering information

Figure 100. Ordering information scheme

Example: ST7 FLI49M K 1 T 6 TR

Family
ST7 Microcontroller family

Sub-family
FLI49M

No. of pins
K = 32

Memory size
1 = 4K

Package
B = DIP
T = LQFP

Temperature range
6 = -40 °C to 85 °C

Shipping
TR = Tape and reel packing (available on LQFP32 only)
Blank = Tube (SDIP32) or Tray (LQFP32)

For a list of available options and orderable part numbers or for further information on any aspect of this device, please contact the ST Sales Office nearest to you.

14.3 Development tools

Development tools for the ST7 microcontrollers include a complete range of hardware systems and software tools from STMicroelectronics and third-party tool suppliers. The range of tools includes solutions to help you evaluate microcontroller peripherals, develop and debug your application, and program your microcontrollers.

14.3.1 Starter kits

ST offers complete, affordable **starter kits**. Starter kits are complete hardware/software tool packages that include features and samples to help you quickly start developing your application.

14.3.2 Development and debugging tools

Application development for ST7 is supported by fully optimizing **C Compilers** and the **ST7 Assembler-Linker** toolchain, which are all seamlessly integrated in the ST7 integrated development environments in order to facilitate the debugging and fine-tuning of your application. The Cosmic C Compiler is available in a free version that outputs up to 16 Kbytes of code.

The range of hardware tools includes a full-featured **STice** Emulator**,** the low-cost **RLink** and the **ST7-STICK** in-circuit debugger/programmer. These tools are supported by the **ST7 Toolset** from STMicroelectronics, which includes the STVD7 integrated development environment (IDE) with high-level language debugger, editor, project manager and integrated programming interface.

14.3.3 Programming tools

During the development cycle, the **STice** emulator, the **ST7-STICK** and the **RLink** provide in-circuit programming capability for programming the Flash microcontroller on your application board.

ST also provides a low-cost dedicated in-circuit programmer and **ST7 Socket Boards,** which provide all the sockets required for programming any of the devices in a specific ST7 sub-family with any tool with in-circuit programming capability for ST7.

For production programming of ST7 devices, ST's third-party tool partners also provide a complete range of gang and automated programming solutions, which are ready to integrate into your production environment.

14.3.4 Order codes for development and programming tools

Table 94 below lists the ordering codes for the ST7LITE49M development and programming tools. For additional ordering codes for spare parts and accessories, refer to the online product selector at www.st.com/mcu.

Table 94. Development tool order codes for the ST7LITE49M family

MCU	Debugging and programming tool	Starter kit with demo board	ST socket boards
ST7FLI49MK1T6 ST7FLI49MK1B6	STice emulator(1) STX-RLINK(2)(3) ST7-STICK(4)(5)	ST7FLITE-SK/RAIS(2)(3)	SBX-DIP32CD and SBX-QP32BC Socket boards(4)

1. Contact local ST sales office for sales types.
2. USB connection to PC.
3. Available from ST or from Raisonance, www.raisonance.com.
4. Add suffix /EU, /UK or /US for the power supply for your region.
5. Parallel port connection to PC.

14.4 ST7 application notes

Table 95. ST7 application notes

Identification	Description
Application examples	
AN1658	Serial numbering implementation
AN1720	managing the Read-Out Protection in Flash microcontrollers
AN1755	A high resolution/precision thermometer using ST7 and NE555
AN1756	Choosing a DALI implementation strategy with ST7DALI
AN1812	A high precision, low cost, single supply ADC for positive and negative input voltages
Example drivers	
AN 969	SCI communication between ST7 and PC
AN 970	SPI communication between ST7 and EEPROM
AN 971	I²C communication between ST7 and M24Cxx EEPROM
AN 972	ST7 software SPI master communication
AN 973	SCI software communication with a PC using ST72251 16-bit timer
AN 974	Real time clock with ST7 timer Output Compare
AN 976	Driving a buzzer through ST7 timer PWM function
AN 979	Driving an analog keyboard with the ST7 ADC
AN 980	ST7 keypad decoding techniques, implementing wakeup on keystroke
AN1017	Using the ST7 Universal Serial Bus microcontroller
AN1041	Using ST7 PWM signal to generate analog output (sinusoïd)
AN1042	ST7 routine for I²C Slave mode Management
AN1044	Multiple interrupt sources management for ST7 MCUs
AN1045	ST7 S/W implementation of I²C bus master
AN1046	UART emulation software
AN1047	Managing reception errors with the ST7 SCI peripherals
AN1048	ST7 software LCD Driver
AN1078	PWM duty cycle switch implementing true 0% & 100% duty cycle
AN1082	Description of the ST72141 motor control peripherals registers
AN1083	ST72141 BLDC motor control software and flowchart example
AN1105	ST7 pCAN peripheral driver
AN1129	PWM management for BLDC motor drives using the ST72141
AN1130	An introduction to sensorless brushless DC motor drive applications with the ST72141
AN1148	Using the ST7263 for designing a USB mouse
AN1149	Handling Suspend mode on a USB mouse
AN1180	Using the ST7263 kit to implement a USB game pad

Table 95. ST7 application notes (continued)

Identification	Description
AN1276	BLDC motor start routine for the ST72141 microcontroller
AN1321	Using the ST72141 motor control MCU in Sensor mode
AN1325	Using the ST7 USB low-speed firmware V4.x
AN1445	Emulated 16-bit slave SPI
AN1475	Developing an ST7265X mass storage application
AN1504	Starting a PWM signal directly at high level using the ST7 16-bit timer
AN1602	16-bit timing operations using ST7262 or ST7263B ST7 USB MCUs
AN1633	Device firmware upgrade (DFU) implementation in ST7 non-USB applications
AN1712	Generating a high resolution sinewave using ST7 PWMART
AN1713	SMBus slave driver for ST7 I^2C peripherals
AN1753	Software UART using 12-bit ART
AN1947	ST7MC PMAC sine wave motor control software library
General purpose	
AN1476	Low cost power supply for home appliances
AN1526	ST7FLITE0 quick reference note
AN1709	EMC design for ST microcontrollers
AN1752	ST72324 quick reference note
Product evaluation	
AN 910	Performance benchmarking
AN 990	ST7 benefits vs industry standard
AN1077	Overview of enhanced CAN controllers for ST7 and ST9 MCUs
AN1086	U435 can-do solutions for car multiplexing
AN1103	Improved B-EMF detection for low speed, low voltage with ST72141
AN1150	Benchmark ST72 vs PC16
AN1151	Performance comparison between ST72254 & PC16F876
AN1278	LIN (Local Interconnect Network) solutions
Product migration	
AN1131	Migrating applications from ST72511/311/214/124 to ST72521/321/324
AN1322	Migrating an application from ST7263 Rev.B to ST7263B
AN1365	Guidelines for migrating ST72C254 applications to ST72F264
AN1604	How to use ST7MDT1-TRAIN with ST72F264
AN2200	Guidelines for migrating ST7LITE1x applications to ST7FLITE1xB
Product optimization	
AN 982	Using ST7 with ceramic resonator

Table 95. ST7 application notes (continued)

Identification	Description
AN1014	How to minimize the ST7 power consumption
AN1015	Software techniques for improving microcontroller EMC performance
AN1040	Monitoring the Vbus signal for USB self-powered devices
AN1070	ST7 checksum self-checking capability
AN1181	Electrostatic discharge sensitive measurement
AN1324	Calibrating the RC oscillator of the ST7FLITE0 MCU using the mains
AN1502	Emulated data EEPROM with ST7 HD Flash memory
AN1529	Extending the current & voltage capability on the ST7265 V_{DDF} supply
AN1530	Accurate timebase for low-cost ST7 applications with internal RC oscillator
AN1605	Using an active RC to wake up the ST7LITE0 from power saving mode
AN1636	Understanding and minimizing ADC conversion errors
AN1828	PIR (passive infrared) detector using the ST7FLITE05/09/SUPERLITE
AN1946	Sensorless BLDC motor control and BEMF sampling methods with ST7MC
AN1953	PFC for ST7MC starter kit
AN1971	ST7LITE0 microcontrolled ballast
Programming and tools	
AN 978	ST7 Visual DeVELOP software key debugging features
AN 983	Key features of the Cosmic ST7 C-compiler package
AN 985	Executing code In ST7 RAM
AN 986	Using the indirect addressing mode with ST7
AN 987	ST7 serial test controller programming
AN 988	Starting with ST7 assembly tool chain
AN1039	ST7 math utility routines
AN1071	Half duplex USB-to-serial bridge using the ST72611 USB microcontroller
AN1106	Translating assembly code from HC05 to ST7
AN1179	Programming ST7 Flash microcontrollers in remote ISP mode (In-situ programming)
AN1446	Using the ST72521 emulator to debug an ST72324 target application
AN1477	Emulated data EEPROM with XFlash memory
AN1527	Developing a USB smartcard reader with ST7SCR
AN1575	On-board programming methods for XFlash and HD Flash ST7 MCUs
AN1576	In-application programming (IAP) drivers for ST7 HD Flash or XFlash MCUs
AN1577	Device firmware upgrade (DFU) Implementation for ST7 USB applications
AN1601	Software implementation for ST7DALI-EVAL
AN1603	Using the ST7 USB device firmware upgrade development kit (DFU-DK)

Table 95. ST7 application notes (continued)

Identification	Description
AN1635	ST7 customer ROM code release information
AN1754	Data logging program for testing ST7 applications via ICC
AN1796	Field updates for Flash memory based ST7 applications using a PC comm port
AN1900	Hardware implementation for ST7DALI-EVAL
AN1904	ST7MC three-phase AC induction motor control software library
AN1905	ST7MC three-phase BLDC motor control software library
System optimization	
AN1711	Software techniques for compensating ST7 ADC errors
AN1827	Implementation of SIGMA-DELTA ADC with ST7FLITE05/09
AN2009	PWM management for 3-phase BLDC motor drives using the ST7FMC
AN2030	Back EMF detection during PWM on time by ST7MC

15 Package mechanical data

In order to meet environmental requirements, ST offers these devices in different grades of ECOPACK® packages, depending on their level of environmental compliance. ECOPACK® specifications, grade definitions and product status are available at: www.st.com. ECOPACK® is an ST trademark

Figure 101. 32-pin plastic dual in-line package, shrink 400-mil width, package outline

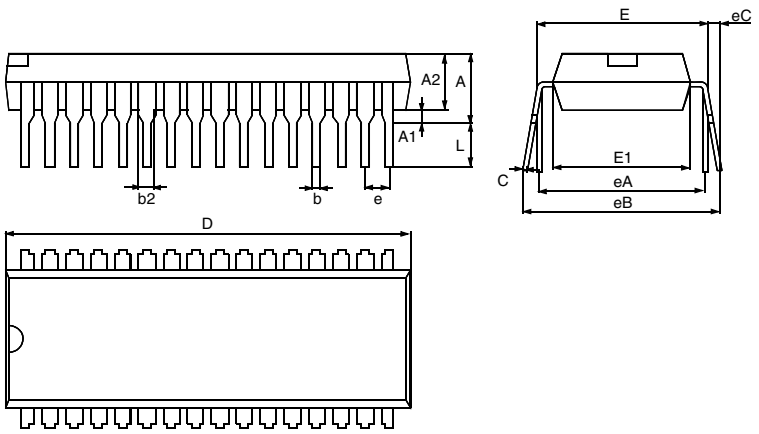

Table 96. 32-pin plastic dual in-line package, shrink 400-mil width, (mechanical data

Dim.	mm			inches(1)		
	Min	Typ	Max	Min	Typ	Max
A	3.56	3.76	5.08	0.1402	0.1480	0.2000
A1	0.51			0.0201		
A2	3.05	3.56	4.57	0.1201	0.1402	0.1799
b	0.36	0.46	0.58	0.0142	0.0181	0.0228
b1	0.76	1.02	1.40	0.0299	0.0402	0.0551
C	0.20	0.25	0.36	0.0079	0.0098	0.0142
D	27.43		28.45	1.0799		1.1201
E	9.91	10.41	11.05	0.3902	0.4098	0.4350
E1	7.62	8.89	9.40	0.3000	0.3500	0.3701
e		1.78			0.0701	
eA		10.16			0.4000	
eB			12.70			0.5000
eC			1.40			0.0551

Table 96. 32-pin plastic dual in-line package, shrink 400-mil width, (mechanical data (continued)

Dim.	mm			inches[1]		
	Min	Typ	Max	Min	Typ	Max
L	2.54	3.05	3.81	0.1000	0.1201	0.1500
	Number of pins					
N	32					

1. Values in inches are converted from mm and rounded to 4 decimal digits.

Figure 102. 32-pin low profile quad flat package (7x7), package outline

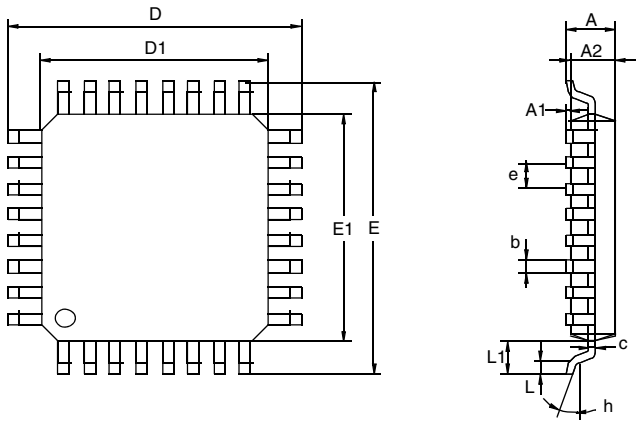

Table 97. 32-pin low profile quad flat package (7x7), package mechanical data

Dim.	mm			inches[1]		
	Min	Typ	Max	Min	Typ	Max
A			1.60			0.0630
A1	0.05		0.15	0.0020		0.0059
A2	1.35	1.40	1.45	0.0531	0.0551	0.0571
b	0.30	0.37	0.45	0.0118	0.0146	0.0177
C	0.09		0.20	0.0035		0.0079
D		9.00			0.3543	
D1		7.00			0.2756	
E		9.00			0.3543	
E1		7.00			0.2756	
e		0.80			0.0315	
θ	0°	3.5°	7°	0°	3.5°	7°
L	0.45	0.60	0.75	0.0177	0.0236	0.0295

Table 97. 32-pin low profile quad flat package (7x7), package mechanical data

Dim.	mm			inches[1]		
	Min	Typ	Max	Min	Typ	Max
L1		1.00			0.0394	
	Number of pins					
N	32					

1. Values in inches are converted from mm and rounded to 4 decimal digits.

15.1 Thermal characteristics

Table 98. Thermal characteristics

Symbol	Ratings		Value	Unit
R_{thJA}	Package thermal resistance (junction to ambient)	LQFP32 SDIP32	55 58	°C/W
T_{Jmax}	Maximum junction temperature[1]		150	°C
P_{Dmax}	Power dissipation[2]		TBD	mW

1. The maximum chip-junction temperature is based on technology characteristics.
2. The maximum power dissipation is obtained from the formula $P_D = (T_J - T_A) / R_{thJA}$.
The power dissipation of an application can be defined by the user with the formula: $P_D=P_{INT}+P_{PORT}$ where P_{INT} is the chip internal power ($I_{DD}xV_{DD}$) and P_{PORT} is the port power dissipation depending on the ports used in the application.

16 Revision history

Table 99. Document revision history

Date	Revision	Changes
01-Jun-2007	1	Initial release.
13-July-2007	2	Document reformatted and status updated to Full Datasheet. Table 5. EEPROM register mapping and reset values removed. *Section 7.2.3: Internal RC oscillator* updated. *Section 7.5.4: AVD threshold selection register (AVDTHCR)*: global description of AVD[1:0] added. *Table 62: Operating characteristics with LVD*: $I_{DD(LVD)}$ typical and maximum values updated, and note removed; V_{tPOR} minimum value updated. *Table 64: Voltage drop*: minimum and maximum values added. *Table 65: Internal RC oscillator characteristics (5.0 V calibration)*, *Table 66: Internal RC oscillator characteristics (3.3 V calibration)*, and *Table 67: Supply current characteristics* updated. *Figure 118*, *Figure 68*, *Figure 122*,*Figure 126*, and *Figure 76* updated.*Table 68: On-chip peripheral characteristics* values and *Note 2* updated. t_{prog} and N_{RW} updated in *Table 77: Flash program memory characteristics*. N_{RW} updated in *Table 78: Data EEPROM memory characteristics*. Class updated forV_{FESD} in *Table 79: EMS test results*. *Table 80: EMI emissions* updated. *Table 80: EMI emissions* updated. R_{PU} and R_{ON} updated in *Table 83: General characteristics* and *Table 85: Asynchronous RESET pin characteristics*, respectively. Cont'd

Table 99. Document revision history (continued)

Date	Revision	Changes
13-Nov-2009	3	CKIN replaced by CLKIN in *Section 2: Pin description on page 14* Reset configuration of each pin shown in bold in *Table 2 on page 15* In *Table 2 on page 15*: OSC1 replaced by OSC1/CLKIN Modified reset configuration for ICCCLK pin (*Table 2 on page 15* Modified note 4 in *Section 4.4: ICC interface on page 21* Modified *Figure 5: Typical ICC interface on page 22* Modified *Section 7.3: Reset sequence manager (RSM) on page 37* (removed “or 4096 CPU clock cycle”) Modifed *Section 7.5.2 on page 44* (Flash memory instead of EEPROM) Added *Table 12: AVD threshold selection bits on page 46* Added *Section 7.5.3 on page 45* *Table 18: ST7LITE49M interrupt mapping on page 55* updated In *Section 11.2.3: Functional description on page 80*: modified *PWM mode* section and *One-pulse mode* section Modified *Figure 45: Block diagram of input capture mode* and *Figure 47: Long range input capture block diagram on page 86* Removed watchdog description in *Section 11.3.2* and *Section 11.3.3 on page 103* Removed bits 2:0 in LTCSR1 register in *Section 11.3.6: Register description on page 104* Modified *Section 11.5.1: Introduction on page 125* and *Section 11.5.2: Main features on page 125* Modified *Figure 59: ADC block diagram on page 126* Modified one I_{DD} value (Run mode) in *Table 67: Supply current characteristics on page 147* Modified *Section 13.6.2: Crystal and ceramic resonator oscillators on page 153* *Section 13.8 on page 156* modified Modified *Table 80: EMI emissions on page 157* (removed notes) V_{IL} modified in *13.9.1: General characteristics on page 158* Modified first paragraph in *Tips when using the LVD on page 169* Modified C_{ADC} in *13.11: 10-bit ADC characteristics on page 170* Modified *Section 14.2: Device ordering information on page 176* Values in inches rounded to 4 decimal digits instead of 3 decimal digits in mechanical data tables in *Section 15 on page 182* Modified *Section 15: Package mechanical data on page 182* *Table 98: Thermal characteristics on page 184* updated Modified development tools section (replaced ST7LITE4 emulator by STice emulator)

Please Read Carefully:

Information in this document is provided solely in connection with ST products. STMicroelectronics NV and its subsidiaries (“ST”) reserve the right to make changes, corrections, modifications or improvements, to this document, and the products and services described herein at any time, without notice.

All ST products are sold pursuant to ST’s terms and conditions of sale.

Purchasers are solely responsible for the choice, selection and use of the ST products and services described herein, and ST assumes no liability whatsoever relating to the choice, selection or use of the ST products and services described herein.

No license, express or implied, by estoppel or otherwise, to any intellectual property rights is granted under this document. If any part of this document refers to any third party products or services it shall not be deemed a license grant by ST for the use of such third party products or services, or any intellectual property contained therein or considered as a warranty covering the use in any manner whatsoever of such third party products or services or any intellectual property contained therein.

UNLESS OTHERWISE SET FORTH IN ST’S TERMS AND CONDITIONS OF SALE ST DISCLAIMS ANY EXPRESS OR IMPLIED WARRANTY WITH RESPECT TO THE USE AND/OR SALE OF ST PRODUCTS INCLUDING WITHOUT LIMITATION IMPLIED WARRANTIES OF MERCHANTABILITY, FITNESS FOR A PARTICULAR PURPOSE (AND THEIR EQUIVALENTS UNDER THE LAWS OF ANY JURISDICTION), OR INFRINGEMENT OF ANY PATENT, COPYRIGHT OR OTHER INTELLECTUAL PROPERTY RIGHT.

UNLESS EXPRESSLY APPROVED IN WRITING BY AN AUTHORIZED ST REPRESENTATIVE, ST PRODUCTS ARE NOT RECOMMENDED, AUTHORIZED OR WARRANTED FOR USE IN MILITARY, AIR CRAFT, SPACE, LIFE SAVING, OR LIFE SUSTAINING APPLICATIONS, NOR IN PRODUCTS OR SYSTEMS WHERE FAILURE OR MALFUNCTION MAY RESULT IN PERSONAL INJURY, DEATH, OR SEVERE PROPERTY OR ENVIRONMENTAL DAMAGE. ST PRODUCTS WHICH ARE NOT SPECIFIED AS "AUTOMOTIVE GRADE" MAY ONLY BE USED IN AUTOMOTIVE APPLICATIONS AT USER’S OWN RISK.

Resale of ST products with provisions different from the statements and/or technical features set forth in this document shall immediately void any warranty granted by ST for the ST product or service described herein and shall not create or extend in any manner whatsoever, any liability of ST.

ST and the ST logo are trademarks or registered trademarks of ST in various countries.

Information in this document supersedes and replaces all information previously supplied.

The ST logo is a registered trademark of STMicroelectronics. All other names are the property of their respective owners.

© 2009 STMicroelectronics - All rights reserved

STMicroelectronics group of companies

Australia - Belgium - Brazil - Canada - China - Czech Republic - Finland - France - Germany - Hong Kong - India - Israel - Italy - Japan - Malaysia - Malta - Morocco - Philippines - Singapore - Spain - Sweden - Switzerland - United Kingdom - United States of America

www.st.com